NOTES:

1. HORIZONTAL DATUM COORDINATES: NAD 83-2011 BASIS OF BEARINGS PER FOUND STREET INTERSECTION MONUMENTATION OF CEDAR GROVE ON THE SKAGIT PLAT NO. 3877 ALONG BAKER LOOP ROAD N74°43'55"E.
2. VERTICAL DATUM: NAVD '88 FEET PROJECT BENCHMARK AT CENTERLINE INTERSECTION MONUMENT OF BALERLOOP ROAD AND CEDAR GROVE AVENUE. ELEVATION: 225.22' (NAVD 88)
3. EASEMENT LOCATIONS AND AREAS ARE APPROXIMATE AND FOR REFERENCE ONLY. SEE FILED AND SIGNED LEGAL EASEMENT DOCUMENTS FOR EXACT LOCATIONS AND SIZES.

LEGEND:

- PARCEL LINE
- RIGHT OF WAY
- EDGE OF PAVEMENT
- TEMPORARY CONSTRUCTION EASEMENT
- SECTION LINE

SEC. S14, T.35N, R.8E, W.M.
SKAGIT COUNTY, WASHINGTON

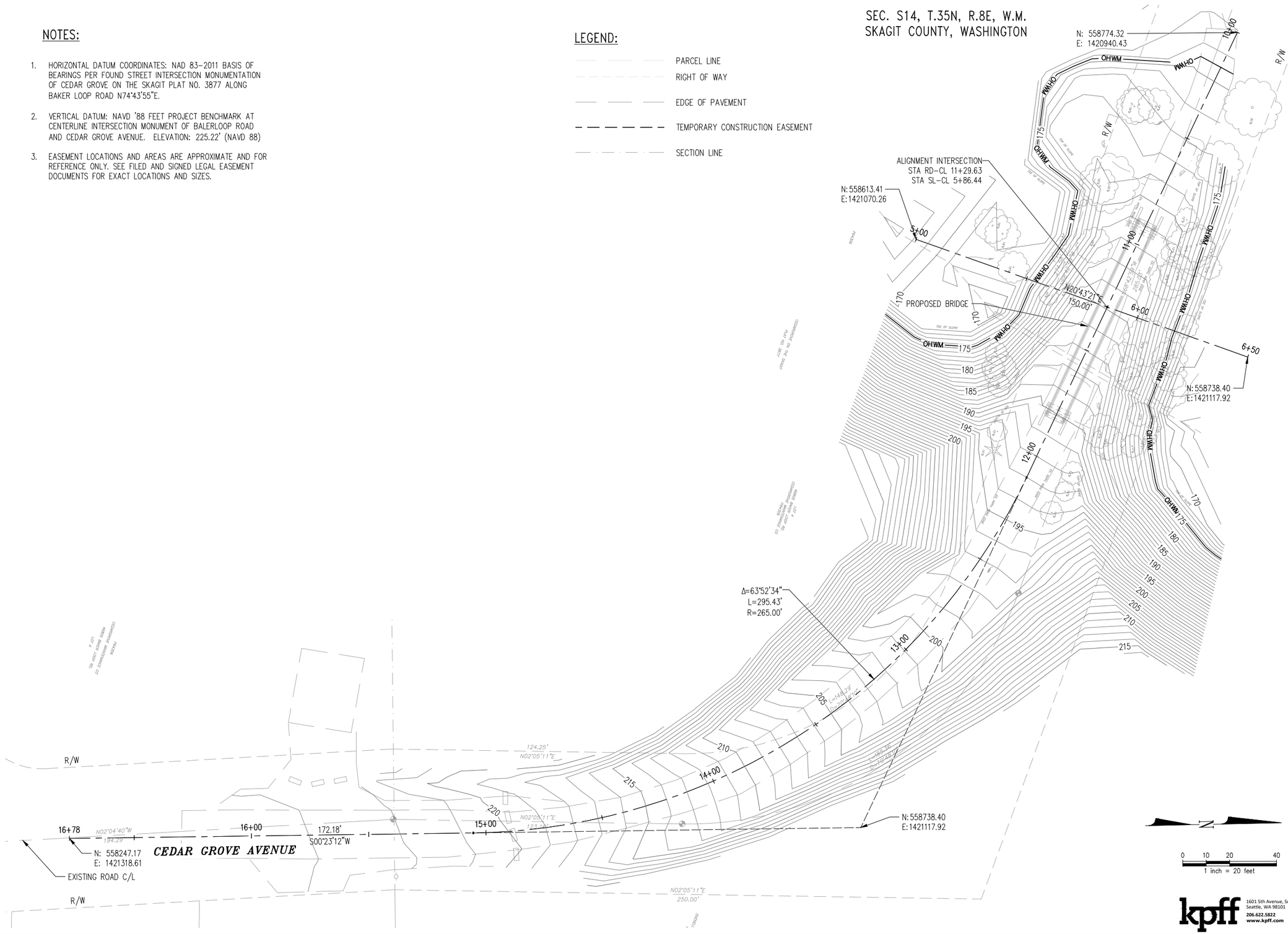

30% DESIGN - NOT FOR CONSTRUCTION

kpff
1601 5th Avenue, Suite 1600
Seattle, WA 98101
206.622.5822
www.kpff.com

SKAGIT COUNTY PUBLIC WORKS
1800 CONTINENTAL PLACE
MOUNT VERNON, WA 98273-5625
(360) 336-9400 FAX (360) 336 9478

NO.	REVISIONS	DATE

PROJ NO
FEDAID NO
DESIGNED BY CHA
CHECKED BY
DRAWN BY SHB
APPROVED BY KAI

PROJECT LOCATED NEAR:
LOCATION
CADASTRAL

OVENELL SLOUGH - CEDAR GROVE
CEDAR GROVE AVE
HORIZONTAL CONTROL / EXISTING CONDITIONS

1 INCH SCALE BAR
ADJUST SCALE ACCORDINGLY

SHEET
1 OF 9

SHTINFO

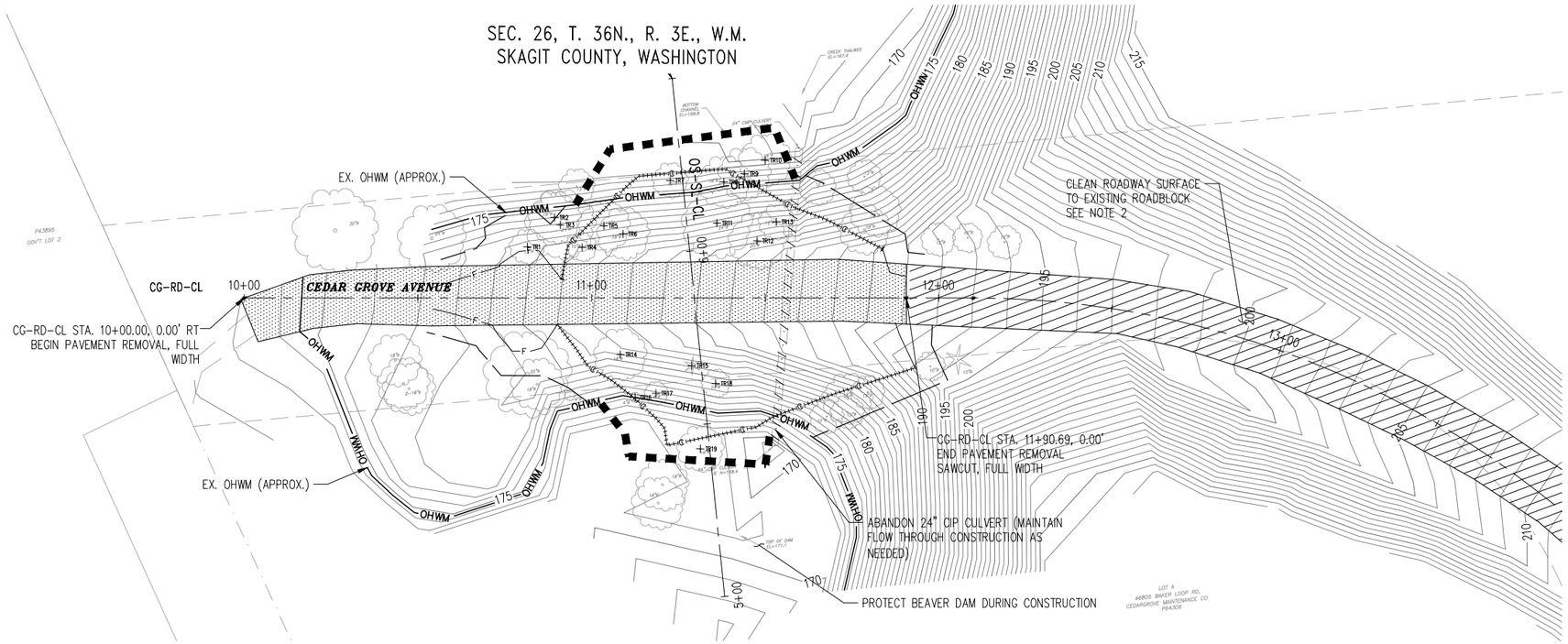

LEGEND:

- RIGHT OF WAY
- TEMPORARY CONSTRUCTION EASEMENT
- SAWCUT
- ABANDON CULVERT
- HIGH-VISIBILITY FENCE
- TEMPORARY ISOLATION WALL
- STRAW WATTLE / CLEARING AND GRUBBING LIMITS
- CUT LIMIT
- FILL LIMIT
- REMOVE ASPHALT CONCRETE PAVEMENT, FULL DEPTH
- CLEAN ROADWAY SURFACE
- TR# TREE REMOVAL ID

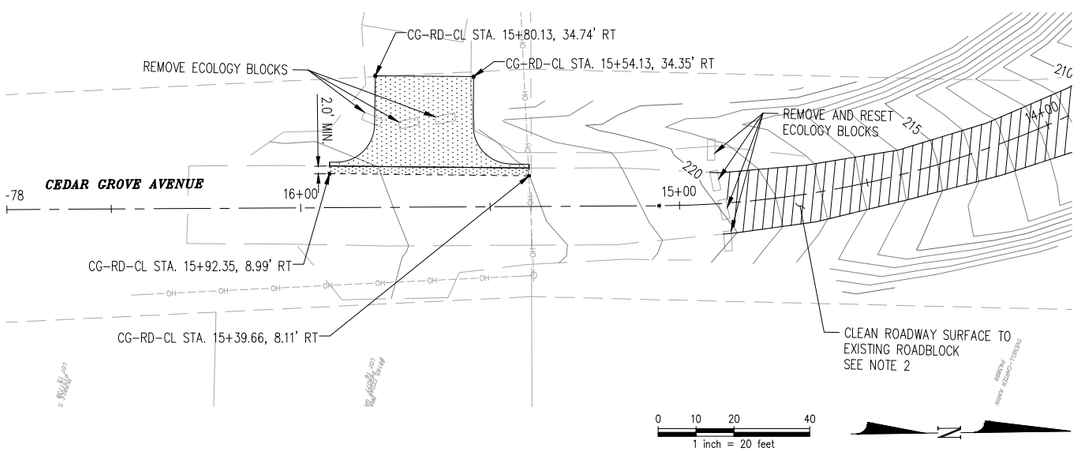

TREE REMOVAL TABLE			
ID	TYPE	TRUNK SIZE	STATION/OFFSET
TR1	D	12"	STA. CG-RD 10+81.55, 14.74' LT
TR2	D	18"	STA. CG-RD 10+89.34, 23.19' LT
TR3	D	24"	STA. CG-RD 10+91.02, 21.07' LT
TR4	D	10"	STA. CG-RD 10+97.30, 14.60' LT
TR5	D	18"	STA. CG-RD 11+03.53, 20.81' LT
TR6	D	18"	STA. CG-RD 11+09.13, 18.46' LT
TR7	D	12"	STA. CG-RD 11+22.66, 33.88' LT
TR8	D	18"	STA. CG-RD 11+38.12, 33.42' LT
TR9	D	18"	STA. CG-RD 11+44.03, 35.79' LT
TR10	D	18"	STA. CG-RD 11+50.00, 39.68' LT

TREE REMOVAL TABLE			
ID	TYPE	TRUNK SIZE	STATION/OFFSET
TR11	D	24"	STA. CG-RD 11+36.10, 21.56' LT
TR12	D	20"	STA. CG-RD 11+47.71, 16.47' LT
TR13	D	12"	STA. CG-RD 11+53.25, 21.92' LT
TR14	D	18"	STA. CG-RD 11+08.31, 16.29' RT
TR15	C	6"	STA. CG-RD 11+28.86, 19.48' RT
TR16	D	4"	STA. CG-RD 11+12.54, 28.66' RT
TR17	D	8"	STA. CG-RD 11+18.59, 27.47' RT
TR18	D	10"	STA. CG-RD 11+35.80, 24.65' RT
TR19	D	16"	STA. CG-RD 11+31.35, 43.46' RT

D = DECIDUOUS TREE
C = CONIFEROUS TREE

TEMPORARY EROSION AND SEDIMENT CONTROL GENERAL NOTES

1. THE IMPLEMENTATION OF THESE TESC PLANS AND THE CONSTRUCTION, MAINTENANCE, REPLACEMENT AND UPGRADING OF THESE ESC FACILITIES IS THE RESPONSIBILITY OF THE CONTRACTOR UNTIL ALL CONSTRUCTION IS COMPLETED AND APPROVED AND VEGETATION/LANDSCAPING IS ESTABLISHED. THE REMOVAL OF ALL TEMPORARY EROSION AND SEDIMENT CONTROL MEASURES SHALL BE THE RESPONSIBILITY OF THE CONTRACTOR UPON APPROVED COMPLETION OF THE PROJECT.
2. THE BOUNDARIES OF THE LIMITS OF SITE PREPARATION SHOWN ON THESE PLANS SHALL BE CLEARLY DEMARCATED IN THE FIELD PRIOR TO CONSTRUCTION. DURING THE CONSTRUCTION PERIOD, NO DISTURBANCE BEYOND THE CLEARING LIMITS SHALL BE PERMITTED.
3. THE TESC FACILITIES SHOWN ON THIS PLAN MUST BE CONSTRUCTED IN CONJUNCTION WITH ALL CLEARING AND GRADING ACTIVITIES, AND IN SUCH A MANNER AS TO ENSURE THAT SEDIMENT AND SEDIMENT-LADEN WATER DOES NOT ENTER THE DRAINAGE SYSTEM, ROADWAYS OR VIOLATE APPLICABLE WATER STANDARDS.
4. THE TESC FACILITIES SHOWN ON THIS PLAN ARE THE MINIMUM REQUIREMENTS FOR ANTICIPATED SITE CONDITIONS DURING THE WET SEASON. DURING THE CONSTRUCTION PERIOD, THESE ESC FACILITIES SHALL BE UPGRADED AS NEEDED FOR UNEXPECTED STORM EVENTS AND TO ENSURE THAT SEDIMENT AND SEDIMENT-LADEN WATER DOES NOT LEAVE THE SITE.
5. ANY AREAS OF EXPOSED SOILS, INCLUDING ROADWAY EMBANKMENTS, THAT WILL NOT BE DISTURBED FOR TWO DAYS DURING THE WET SEASON OR SEVEN DAYS DURING THE DRY SEASON SHALL BE IMMEDIATELY STABILIZED WITH APPROVED BMP METHODS (E.G. SEEDING, MULCHING, PLASTIC COVERING, ETC.).
6. ANY AREA NEEDING BMP MEASURES NOT REQUIRING IMMEDIATE ATTENTION SHALL BE ADDRESSED WITHIN TEN (10) DAYS.

CONSTRUCTION NOTES:

1. UTILITIES SHOWN FOR INFORMATION ONLY, CONTRACTOR SHALL VERIFY PRIOR TO CONSTRUCTION ACTIVITIES.
2. CLEAR ROADWAY SURFACE OF SEDIMENTS & DEBRIS. COORDINATE DISPOSAL WITH OWNER.

30% DESIGN - NOT FOR CONSTRUCTION

kpff
1601 5th Avenue, Suite 1600
Seattle, WA 98101
206.622.5822
www.kpff.com

SKAGIT COUNTY PUBLIC WORKS
1800 CONTINENTAL PLACE
MOUNT VERNON, WA 98273-5625
(360) 336-9400 FAX (360) 336 9478

NO.	REVISIONS	DATE

PROJ.NO
FEDAID NO
DESIGNED BY CHA
DRAWN BY SHB
CHECKED BY
APPROVED BY KAI

PROJECT LOCATED NEAR:
LOCATION
CADASTRAL

OVENELL SLOUGH - CEDAR GROVE
CEDAR GROVE AVE

SITE PREP AND T.E.S.C. PLAN

1 INCH SCALE BAR
ADJUST SCALE ACCORDINGLY

SHEET
2 OF 9

SHTINFO

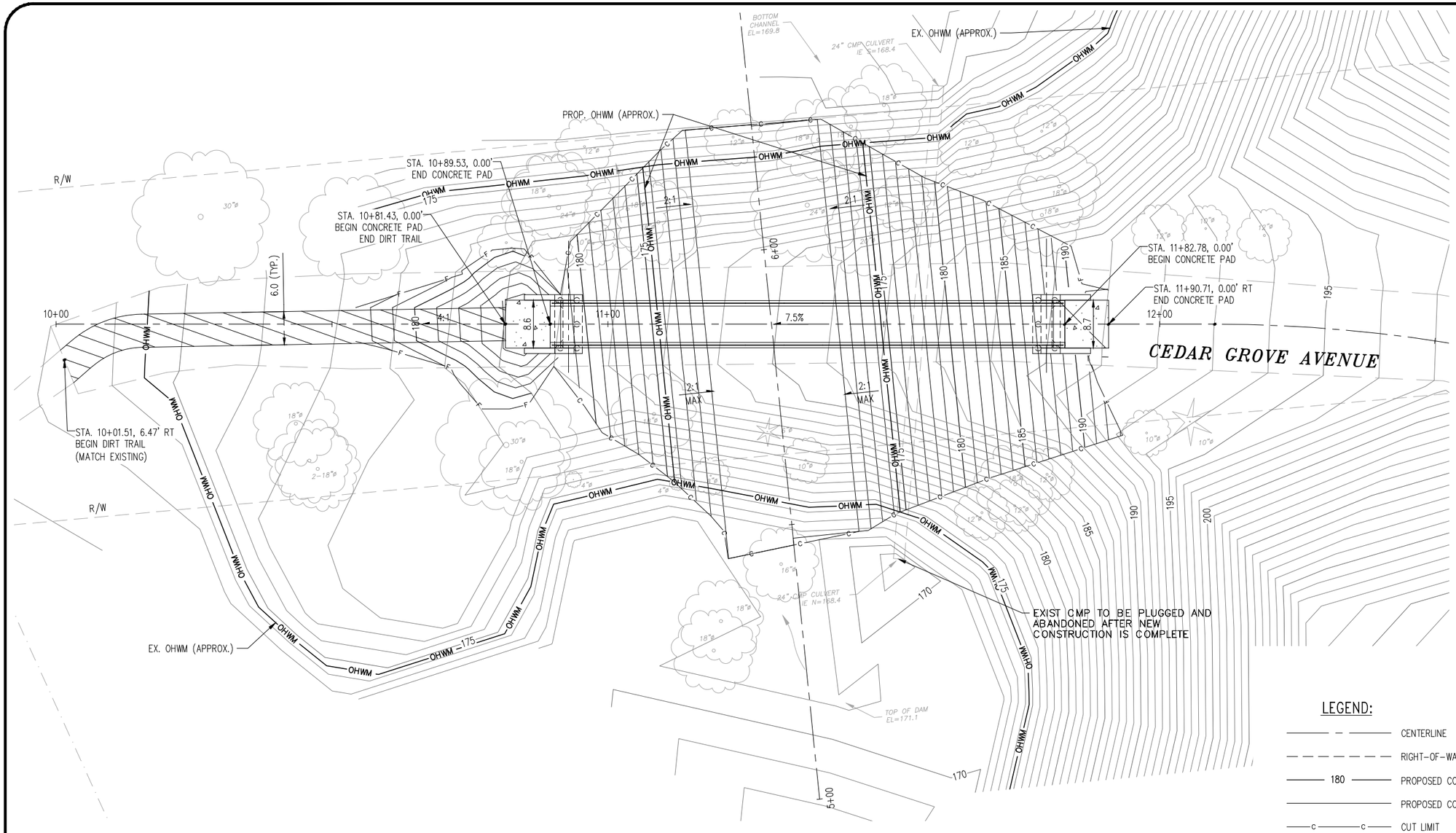

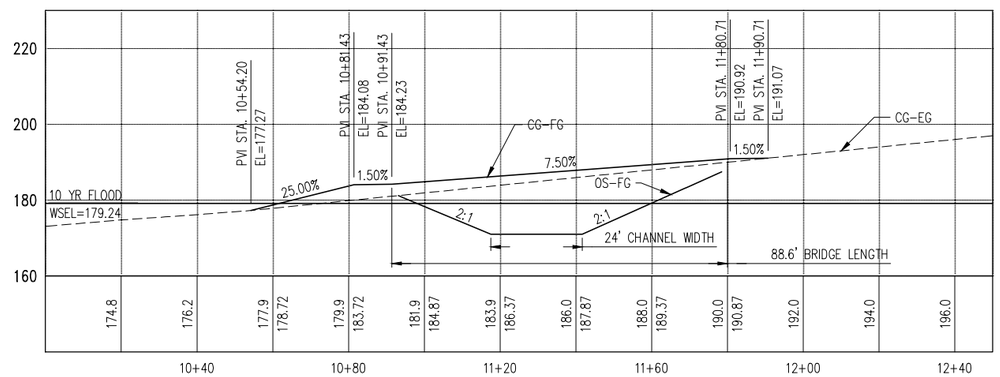

CEDER GROVE ROADWAY PROFILE

SCALE: 1" = 20'

LEGEND:

- CENTERLINE
- RIGHT-OF-WAY
- 180 PROPOSED CONTOUR (MAJOR)
- PROPOSED CONTOUR (MINOR)
- C C CUT LIMIT
- F F FILL LIMIT
- (4" CONCRETE PAD OVER 4" CSBC)
- DIRT TRAIL

30% DESIGN – NOT FOR CONSTRUCTION

kpff
1601 5th Avenue, Suite 1600
Seattle, WA 98101
206.622.5822
www.kpff.com

SKAGIT COUNTY PUBLIC WORKS
1800 CONTINENTAL PLACE
MOUNT VERNON, WA 98273-5625
(360) 336-9400 FAX (360) 336 9478

NO.	REVISIONS	DATE

PROJ.NO
FEDAID NO
DESIGNED BY CHA
CHECKED BY
DRAWN BY SHB
APPROVED BY KAI

PROJECT LOCATED NEAR:
LOCATION
CADASTRAL

OVENELL SLOUGH – CEDAR GROVE
CEDAR GROVE AVE

ROADWAY PLAN AND PROFILE

1 INCH SCALE BAR
ADJUST SCALE ACCORDINGLY

SHEET 3 OF 9

SHTINFO

SEC. 26, T. 36N., R. 3E., W.M.
SKAGIT COUNTY, WASHINGTON

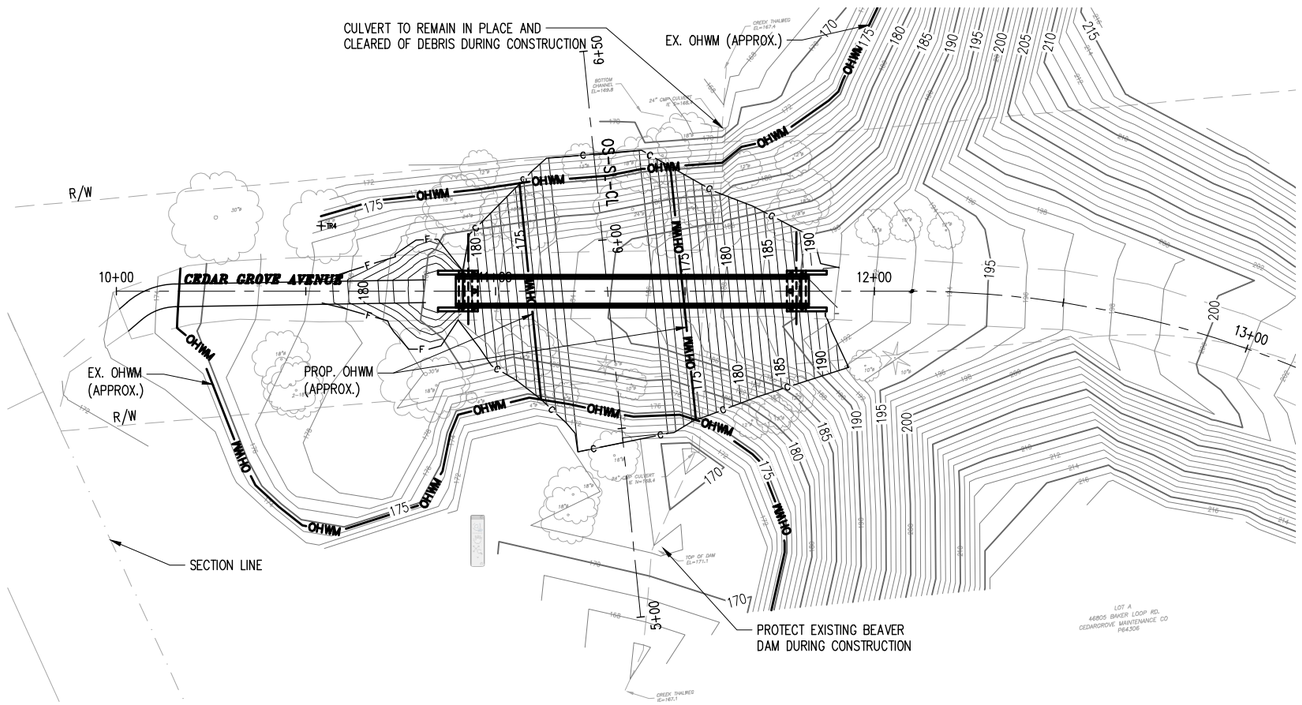

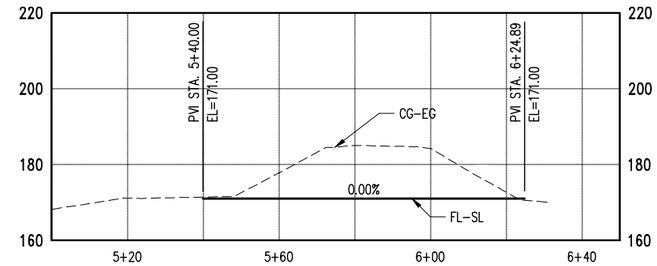

OS-SL-CL PROFILE
SCALE: 1" = 20'

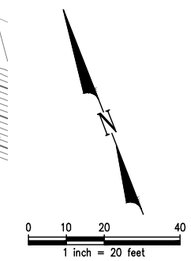

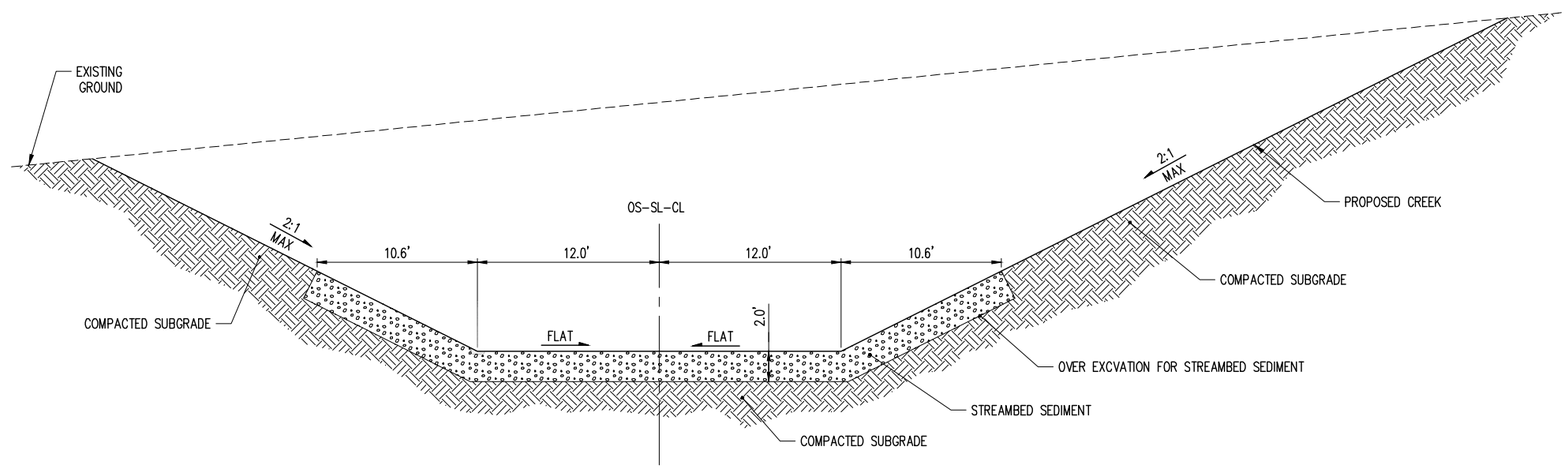

OS-SL-CL TYPICAL SECTION
SCALE: 1" = 5'

30% DESIGN - NOT FOR CONSTRUCTION

SKAGIT COUNTY PUBLIC WORKS
1800 CONTINENTAL PLACE
MOUNT VERNON, WA 98273-5625
(360) 336-9400 FAX (360) 336 9478

NO.	REVISIONS	DATE

PROJ.NO
FEDAIDNO
DESIGNEDBY CHA DRAWNBY SHB
CHECKEDBY APPROVEDBY KAI

PROJECT LOCATED NEAR:
LOCATION
CADASTRAL

OVENELL SLOUGH - CEDAR GROVE
CEDAR GROVE AVE

CHANNEL IMPROVEMENTS PLAN

1 INCH SCALE BAR
ADJUST SCALE ACCORDINGLY

SHEET 4 OF 9

kpff
1601 5th Avenue, Suite 1600
Seattle, WA 98101
206.622.5822
www.kpff.com

SHTINFO

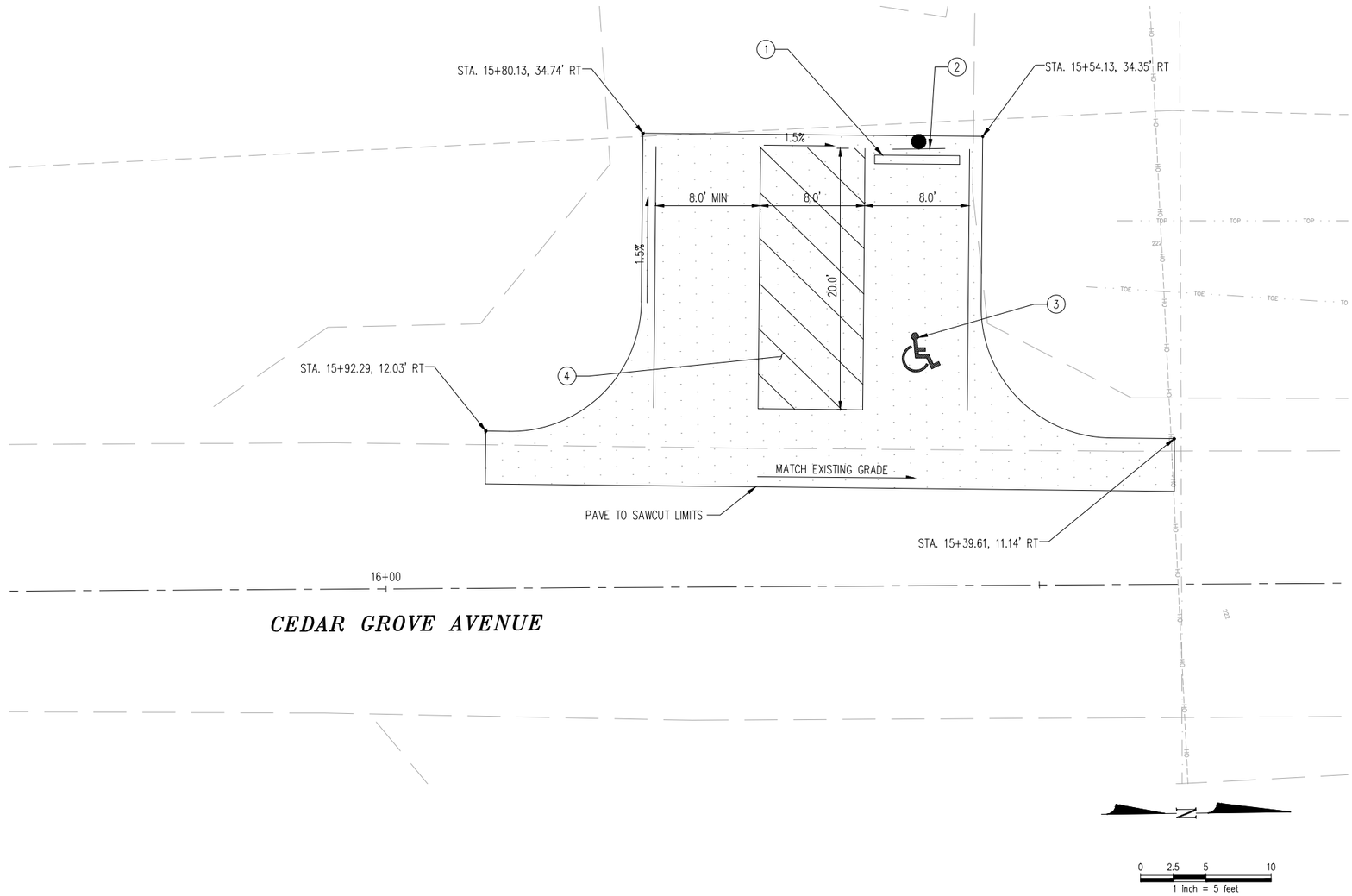

LEGEND:

- CENTERLINE
- RIGHT-OF-WAY
- 180 PROPOSED CONTOUR (MAJOR)
- PROPOSED CONTOUR (MINOR)
- C C CUT LIMIT
- F F FILL LIMIT
- 4" COMMERCIAL HMA OVER 4" CSBC

CONSTRUCTION NOTES:

1. PRECAST CONCRETE WHEELSTOP, 6FT
2. ADA RESERVED PARKING SIGNAGE
3. PAINT LEGEND, HANDICAP PARKING SPACE
4. ADA VAN STALL LOAD/UNLOAD ZONE STRIPING

30% DESIGN – NOT FOR CONSTRUCTION

kpff
1601 5th Avenue, Suite 1600
Seattle, WA 98101
206.622.5822
www.kpff.com

SKAGIT COUNTY PUBLIC WORKS
1800 CONTINENTAL PLACE
MOUNT VERNON, WA 98273-5625
(360) 336-9400 FAX (360) 336 9478

NO.	REVISIONS	DATE

JUSTIN G. MATTHEWS, STATE OF WASHINGTON, 49809, REGISTERED PROFESSIONAL ENGINEER

PROJ.NO
FEDAIDNO
DESIGNEDBY CHA
DRAWNBY SHB
CHECKEDBY
APPROVEDBY KAI

PROJECT LOCATED NEAR:
LOCATION
CADASTRAL

OVENELL SLOUGH – CEDAR GROVE
CEDAR GROVE AVE

PARKING LOT PAVING PLAN

1 INCH SCALE BAR
ADJUST SCALE ACCORDINGLY

SHEET
5 OF 9

SHTINFO

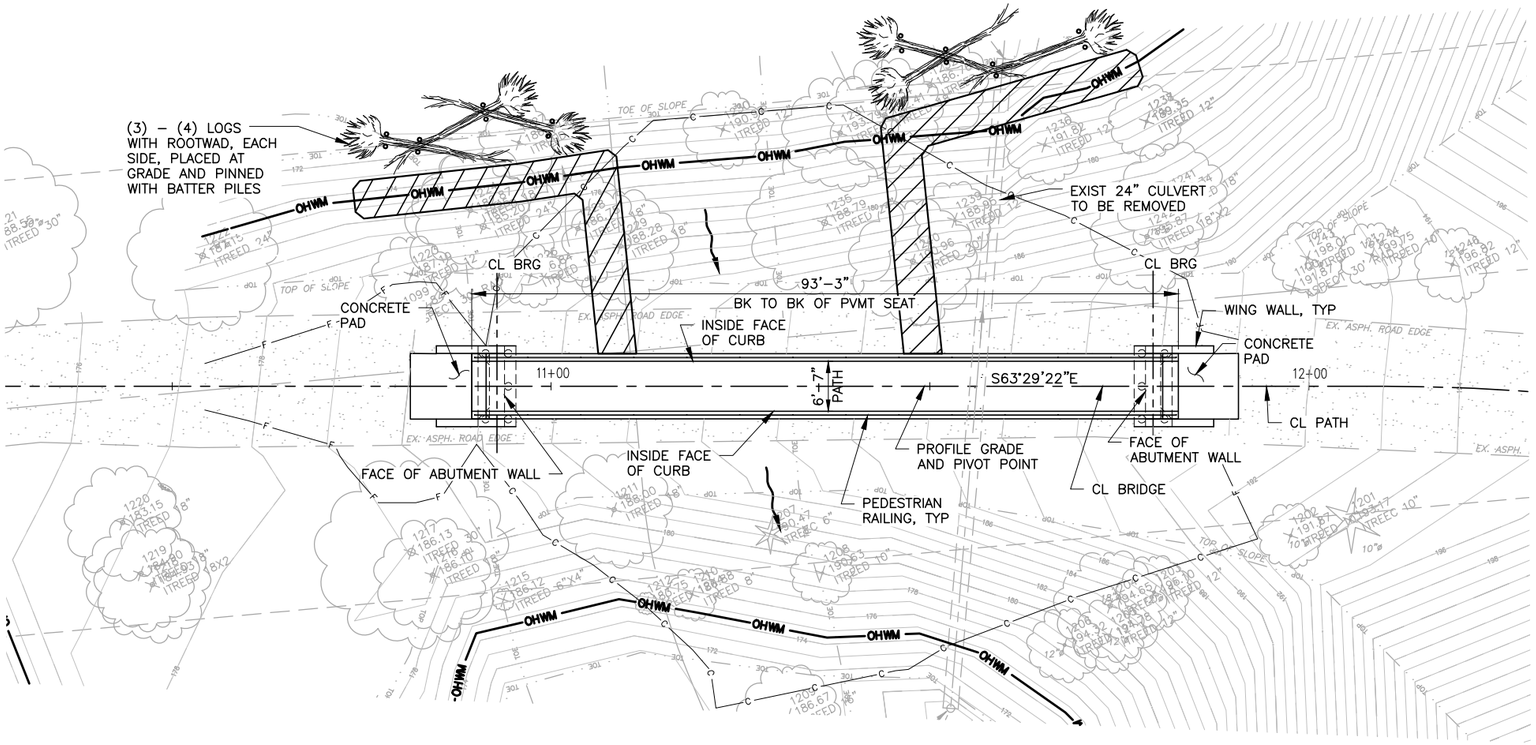

PLAN

Scale: 1" = 10'

LEGEND

TOE PROTECTION EXTENTS, LIVE STAKING AND BRUSH LAYERING

OHWM — APPROXIMATE OHWM

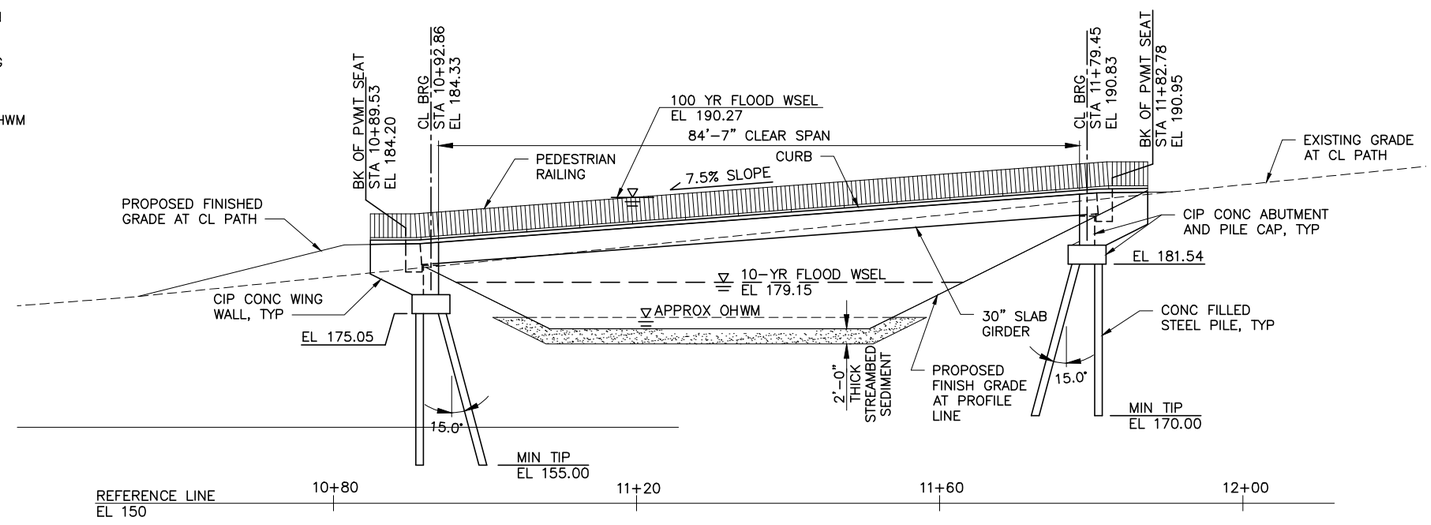

ELEVATION

Scale: 1" = 10'

PRECAST PRESTRESSED SLAB CONCRETE GIRDERS – 30" VOIDED SLAB UNIT LIVE LOADING: PEDESTRIAN

0 5 10 15
SCALE IN FEET

kpff
1601 5th Avenue, Suite 1600
Seattle, WA 98101
206.622.5822
www.kpff.com

SKAGIT COUNTY PUBLIC WORKS
1800 CONTINENTAL PLACE
MOUNT VERNON, WA 98273-5625
(360) 336-9400 FAX (360) 336 9478

NO.	REVISIONS	DATE

ANDREW F. STRUCKMEYER, STATE OF WASHINGTON, 38980, REGISTERED PROFESSIONAL ENGINEER

PROJECT NO.: 1900719
FED. AID NO.:
DESIGNED BY: DLK
DRAWN BY: SQ
CHECKED BY: JRL
APPROVED BY: AMS

PROJECT LOCATED NEAR: CONCRETE, WA

OVENELL SLOUGH/CEDAR GROVE CULVERT REPLACEMENT PROJET

BRIDGE PLAN AND ELEVATION

1 INCH SCALE BAR
ADJUST SCALE ACCORDINGLY

SHEET 6 OF 9

30% DESIGN - NOT FOR CONSTRUCTION

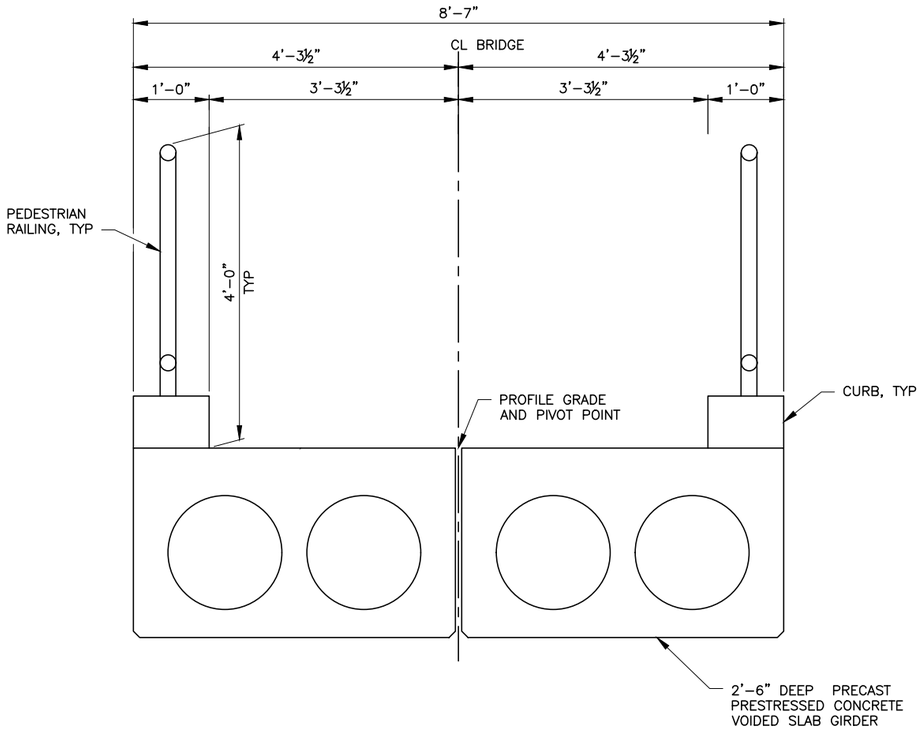

TYPICAL SECTION

Scale: 1" = 1'-0"

GENERAL NOTES

1. ALL MATERIAL AND WORKMANSHIP SHALL BE IN ACCORDANCE WITH THE REQUIREMENTS OF THE WASHINGTON STATE DEPARTMENT OF TRANSPORTATION "STANDARD SPECIFICATIONS FOR ROAD, BRIDGE, AND MUNICIPAL CONSTRUCTION" DATED 2020.

2. THE STRUCTURE HAS BEEN DESIGNED IN ACCORDANCE WITH THE REQUIREMENTS OF THE AASHTO LRFD BRIDGE DESIGN SPECIFICATIONS NINTH EDITION – DATED 2020 (AASHTO LRFD).

3. SEISMIC DESIGN OF THE STRUCTURE HAS BEEN COMPLETED USING

PGA	= 0.265G
SITE CLASS	= D

4. DESIGN LOADS:

DEAD LOAD:	
CONCRETE	–155 PCF
STEEL	–490 PCF
LIVE LOAD:	
PEDESTRIAN	–90 PSF
SURCHARGE	–50 PSF UNIFORM LATERAL PRESSURE
EARTH PRESSURE:	
AT REST	–55 PCF EQUIVALENT FLUID PRESSURE
SEISMIC SURCHARGE	–12H PSF UNIFORM LATERAL PRESSURE
LIQUEFACTION	–500 PCF EQUIVALENT FLUID PRESSURE

5. UNLESS OTHERWISE SHOWN IN THE PLANS THE CONCRETE COVER MEASURED FROM THE FACE OF THE CONCRETE TO THE FACE OF ANY REINFORCING STEEL SHALL BE THREE INCHES AT THE BOTTOM OF THE CAPS, TWO INCHES AT THE TOP OF THE CAPS, AND ONE AND A HALF INCHES AT ALL OTHER LOCATIONS.

6. CAST-IN-PLACE CONCRETE SHALL BE CLASS 4000, UNO.

7. ALL STEEL REINFORCEMENT SHALL MEET THE REQUIREMENTS OF STANDARD SPECIFICATIONS SECTION 9-07.2.

8. ALL EXTERIOR CORNERS SHALL HAVE A 3/4" CHAMFER AND ALL INTERIOR CORNERS SHALL HAVE A 3/4" FILLET UNO.

9. ALL DIMENSIONS AND ELEVATIONS SHALL BE VERIFIED IN THE FIELD BY THE CONTRACTOR.

kpff
1601 5th Avenue, Suite 1600
Seattle, WA 98101
206.622.5822
www.kpff.com

SKAGIT COUNTY PUBLIC WORKS
1800 CONTINENTAL PLACE
MOUNT VERNON, WA 98273-5625
(360) 336-9400 FAX (360) 336 9478

NO.	REVISIONS	DATE

PROJECT NO.: 1900719
FED. AID NO.: XXXX
DESIGNED BY: DLK
DRAWN BY: SQ
CHECKED BY: JRL
APPROVED BY: AMS

PROJECT LOCATED NEAR:
CONCRETE, WA

OVENELL SLOUGH/CEDAR GROVE CULVERT REPLACEMENT PROJET

TYPICAL SECTION AND GENERAL NOTES

1 INCH SCALE BAR
ADJUST SCALE ACCORDINGLY

SHEET
7 OF 9

30% DESIGN - NOT FOR CONSTRUCTION

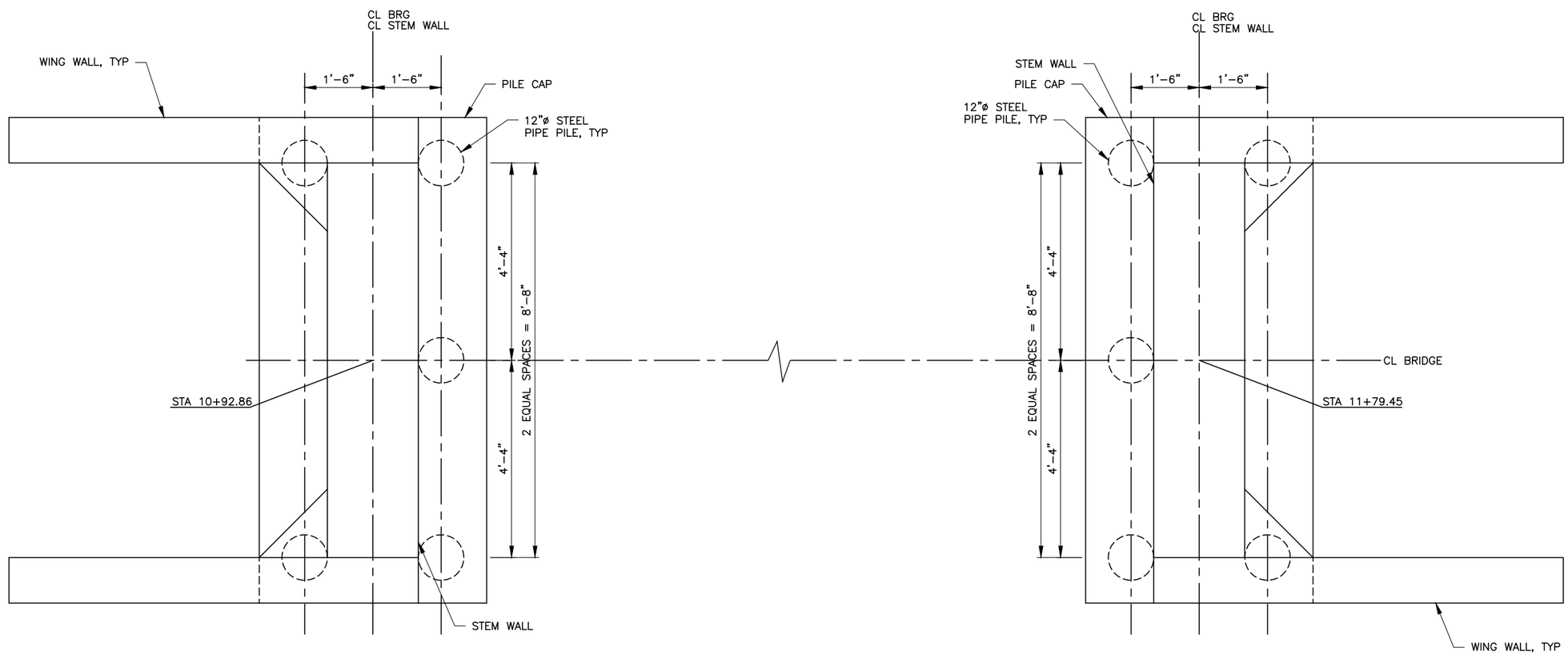

FOUNDATION PLAN

kpff
1601 5th Avenue, Suite 1600
Seattle, WA 98101
206.622.5822
www.kpff.com

SKAGIT COUNTY
PUBLIC WORKS
1800 CONTINENTAL PLACE
MOUNT VERNON, WA 98273-5625
(360) 336-9400 FAX (360) 336 9478

NO.	REVISIONS	DATE

ANNIE F. STRUCKHART
STATE OF WASHINGTON
49960
REGISTERED PROFESSIONAL ENGINEER

PROJECT NO.: 1900719
FED. AID NO.: XXXX
DESIGNED BY: DLK
DRAWN BY: SQ
CHECKED BY: JRL
APPROVED BY: AMS

PROJECT LOCATED NEAR:
CONCRETE, WA

OVENELL SLOUGH/CEDAR GROVE CULVERT REPLACEMENT PROJET

FOUNDATION LAYOUT

1 INCH SCALE BAR
ADJUST SCALE ACCORDINGLY

SHEET
8 OF 9

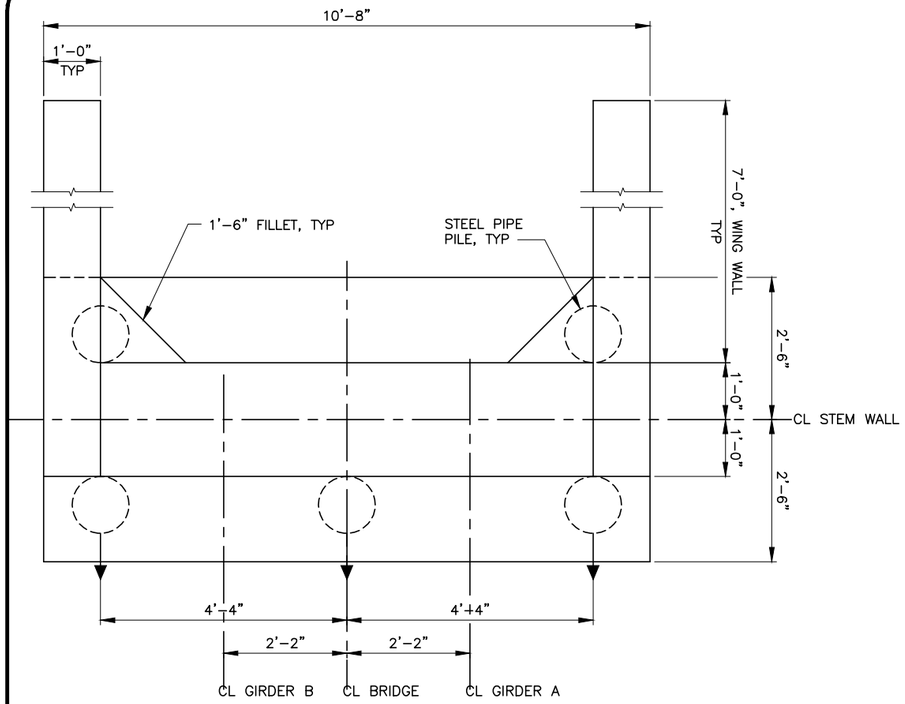

PLAN
Scale: 3/4" = 1'-0"

ABUTMENT 1 SHOWN, ABUTMENT 2 SIMILAR

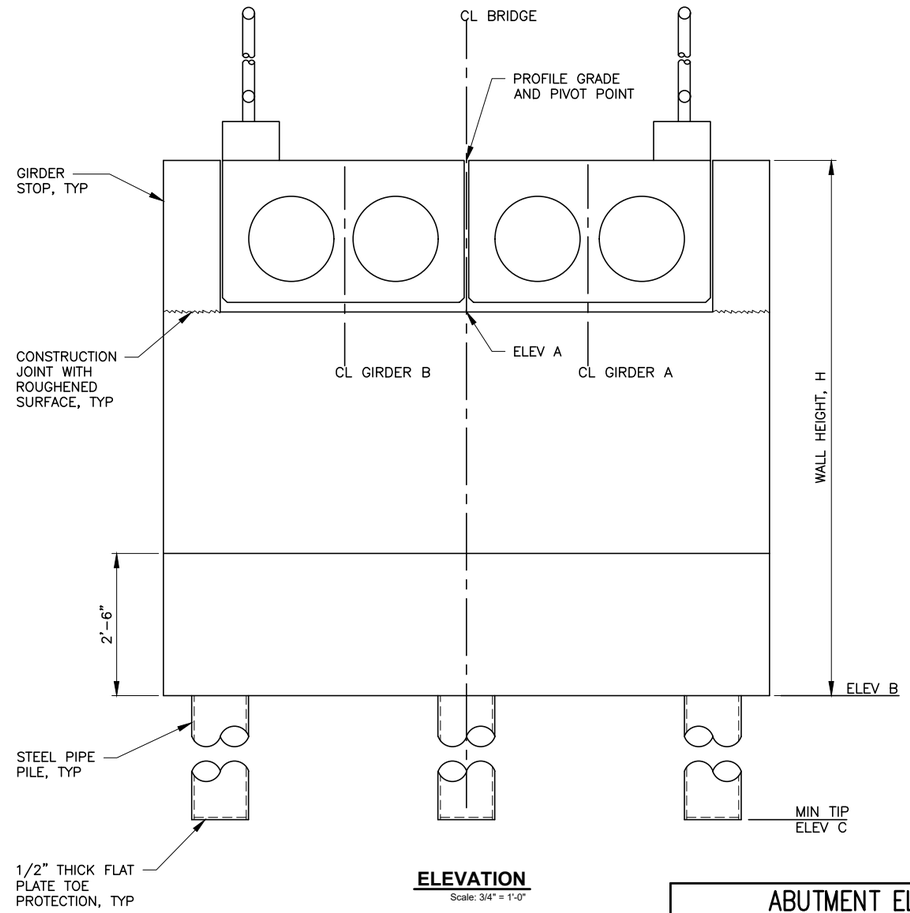

ELEVATION
Scale: 3/4" = 1'-0"

ABUTMENT ELEVATIONS			
ABUTMENT	ELEV A	ELEV B	ELEV C
1	181.66	175.05	155.0
2	188.15	181.54	170.0

kpff
1601 5th Avenue, Suite 1600
Seattle, WA 98101
206.622.5822
www.kpff.com

SKAGIT COUNTY PUBLIC WORKS
1800 CONTINENTAL PLACE
MOUNT VERNON, WA 98273-5625
(360) 336-9400 FAX (360) 336 9478

NO.	REVISIONS	DATE

PROJECT NO.: 1900719
FED. AID NO.: XXXX
DESIGNED BY: DLK
DRAWN BY: SQ
CHECKED BY: JRL
APPROVED BY: AMS

PROJECT LOCATED NEAR: CONCRETE, WA

OVENELL SLOUGH/CEDAR GROVE CULVERT REPLACEMENT PROJET

ABUTMENT PLAN AND ELEVATION

1 INCH SCALE BAR
ADJUST SCALE ACCORDINGLY

SHEET 9 OF 9

30% DESIGN - NOT FOR CONSTRUCTION