# Town of Yacolt, Washington

## Yacolt General Sewer Plan

## FINAL

**14 January 2011**

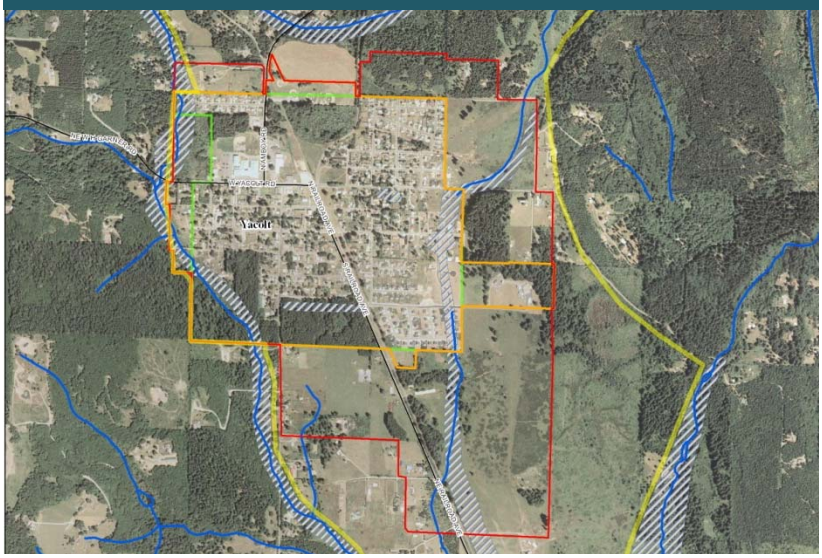


**Prepared for**


**Town of Yacolt, Washington**
**202 W. Cushman Street**
**Yacolt, WA 98675**


**K/J No. 0891009.00**


Kennedy/Jenks Consultants
Engineers & Scientists

# Town of Yacolt, Washington

## Yacolt General Sewer Plan

**Final Submittal**

14 January 2011

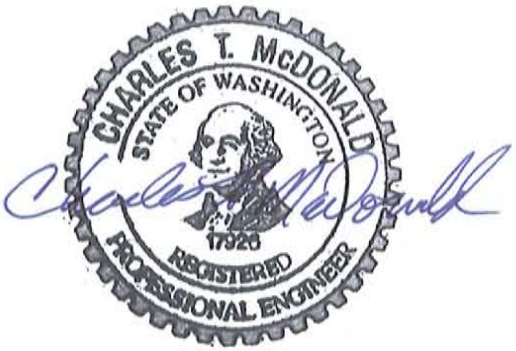


Submitted by:

Chuck McDonald, P.E.
Travis Tormanen, P.E.

**KENNEDY/JENKS CONSULTANTS**
200 S.W. Market Street, Suite 500
Portland, Oregon 97201-5715
503-295-4911
503-295-4901 (Fax)

JOB NO. 0891009.00

# Table of Contents

*List of Tables* ..... *vi*

*List of Figures* ..... *viii*

*List of Appendices* ..... *ix*

*List of Acronyms* ..... *ix*

*WAC 173-240 Key Locator List* ..... *xi*

Section 1: Executive Summary ..... 1-1

1.1 Existing Area ..... 1-1
1.2 Current Treatment ..... 1-1
1.3 Basis of Future Need ..... 1-1
1.4 Recommended Improvements ..... 1-2
1.5 Project Costs ..... 1-3
1.6 Project Schedule ..... 1-4
1.7 Funding ..... 1-5

Section 2: Introduction – Basis for Need ..... 2-1

2.1 Background ..... 2-1
2.2 Yacolt 2004 Policies ..... 2-2
2.3 Purpose ..... 2-4
2.4 Planning Period ..... 2-4
2.5 Scope and Organization ..... 2-4

Section 3: Existing Conditions and Service Area ..... 3-1

3.1 Local Area Sewer Service ..... 3-1
3.2 Yacolt Ownership & Operation ..... 3-1
3.3 Industrial Lands ..... 3-1
3.4 Water Quality Management ..... 3-2
3.5 State Environmental Policy Act (SEPA) ..... 3-2
3.6 Planning Area ..... 3-2
3.7 Land Uses ..... 3-3
3.7.1 Residential ..... 3-3
3.7.2 Public Facilities ..... 3-3
3.7.3 Commercial ..... 3-3
3.7.4 Industry ..... 3-3
3.8 Industrial Wastes – Pretreatment Needs ..... 3-4
3.9 Urban Reserve ..... 3-4
3.10 Open Space – Parks ..... 3-4
3.11 Water ..... 3-5
3.12 Groundwater ..... 3-5

3.13 Surface Water ....3-5
3.14 Climate ....3-6
3.15 Topography ....3-6
3.16 Soils ....3-6

Section 4: Previous Studies .... 4-1

4.1 Hydrogeological Studies ....4-1
4.2 Recharge....4-2
4.3 Problems and Past Action....4-2
4.3.1 Current Practices ....4-3
4.3.2 Action Plan—Wastewater Management Program....4-4
4.3.2.1 Previous Items ....4-4
4.3.2.2 Current Items ....4-4

Section 5: Population, Flow and Load Projections .... 5-1

5.1 Population ....5-1
5.2 Flow....5-1

Section 6: Regulatory Requirements.... 6-1

6.1 Washington Water Quality Criteria....6-1
6.2 Applicable Water Quality Standards....6-1
6.2.1 BOD/TSS ....6-2
6.2.2 Fecal Coliform....6-2
6.2.3 Turbidity ....6-2
6.2.4 Toxic Substances....6-2
6.2.5 Temperature....6-2
6.3 Reclaimed Water....6-2
6.4 Biosolids....6-4
6.4.1 Biosolids Regulations....6-4
6.4.2 Pathogen Reduction Requirements ....6-4
6.4.3 Vector Attraction Requirements ....6-5
6.4.4 Site Management Practices ....6-5
6.4.5 Pollutants ....6-6
6.4.6 Coverage under Ecology's General Permit for Biosolids Management and Residual Solids Management Plan....6-6

Section 7: Collection System .... 7-1

7.1 Introduction ....7-1
7.2 Collection System Alternatives....7-1
7.2.1 Local (Washington) Existing Users ....7-1
7.3 Gravity Sewer....7-2
7.3.1 Potential for a Gravity System....7-2

7.3.2 Potential Impacts ..... 7-2
7.4 Septic Tank Effluent Pump (STEP) ..... 7-3
7.4.1 Potential for a STEP System ..... 7-4
7.4.2 Potential Impacts ..... 7-4
7.5 Septic Tank Effluent Gravity (STEG) Systems ..... 7-5
7.5.1 Potential for a STEG System ..... 7-6
7.5.2 Potential Impacts of a STEG System ..... 7-7
7.6 Vacuum Systems ..... 7-7
7.6.1 Potential for a Vacuum System ..... 7-7
7.6.2 Potential Impacts of a Vacuum System ..... 7-8
7.7 Grinder Systems ..... 7-8
7.7.1 Potential for a Grinder System ..... 7-9
7.7.2 Potential Impacts of Grinder Systems ..... 7-9
7.8 Alternative Comparison ..... 7-10
7.9 Recommendations ..... 7-13

Section 8: Treatment ..... 8-1

8.1 Treatment Systems ..... 8-1
8.1.1 Suspended Growth Treatment System ..... 8-2
8.1.1.1 Conventional Activated Sludge (CAS) ..... 8-2
8.1.1.2 Sequencing Batch Reactors (SBR) ..... 8-2
8.1.1.3 Oxidation Ditches ..... 8-3
8.1.1.4 Packaged Membrane Systems: Membrane BioReactor (MBR) ..... 8-4
8.1.1.5 Packaged Biological Nutrient Removal Systems (Aeromod) ..... 8-5
8.1.2 Fixed Film Treatment System ..... 8-6
8.1.2.1 Recirculating Media Filters (RMF) – Sand/Gravel ..... 8-6
8.1.2.2 Orenco Systems: Advantex ..... 8-7
8.1.3 Lagoon System ..... 8-9
8.1.4 Pump Station(s) and Pressure Main Transport of Wastewater to the Closest Treatment Facility (City of Battle Ground). ..... 8-11
8.1.5 Comparison of Treatment Technologies ..... 8-11
8.1.6 Treatment Capabilities – Reduction of Constituents ..... 8-12
8.1.6.1 Pollutants of Concern ..... 8-13
8.1.7 Cost Analysis ..... 8-13
8.1.8 Recommendations and Conclusions ..... 8-15
8.2 Solids ..... 8-17
8.3 Disinfection ..... 8-19
8.4 Site Layout ..... 8-20

Section 9: Discharge ..... 9-1

9.1 Effluent Discharge Alternatives ....9-1
9.2 Physical Conditions in the Yacolt Valley ....9-1
9.2.1 Climate ....9-1
9.2.2 Surface Water ....9-2
9.2.3 Geology and Groundwater Conditions ....9-2
9.2.3.1 Local Geology and Hydrogeology ....9-2
9.2.3.2 Groundwater Depths, Flow Directions and Gradients ....9-3
9.3 Large On Site Sewage Systems ....9-4
9.4 Surface Irrigation with Wet Weather Effluent Storage - Agricultural and Landscape Irrigation ....9-5
9.5 Subsurface Discharge to groundwater ....9-6
9.5.1.1 Potential Subsurface Discharge Locations ....9-7
9.5.1.2 Proposed Discharge Sizing and Layout ....9-8
9.5.1.3 Existing Groundwater Quality ....9-8
9.5.1.4 Groundwater Mounding Evaluation ....9-9
9.5.1.5 Groundwater Mixing Evaluation ....9-11
9.5.1.6 Additional Site Investigation for Facility Planning-Groundwater Discharge ....9-13
9.5.1.7 Emerging Contaminants ....9-14
9.5.1.8 Clark Public Utility Well Head Protection Plan ....9-14
9.5.1.9 Costs ....9-15
9.6 Direct Discharge to Surface Water ....9-15
9.6.1 East Fork of Lewis River: Flows and Water Quality Parameters ....9-16
9.6.2 Treatment Plant Effluent: Flows and Water Quality Parameters ....9-17
9.6.3 Comparison of Mixed Water Quality Parameters to Established Fresh Water Criteria ....9-18
9.6.3.1 Temperature ....9-18
9.6.3.2 pH ....9-20
9.6.3.3 Ammonia-Nitrogen (NH3-N) and Un-ionized Ammonia (NH3) ....9-20
9.6.3.4 Total Phosphorus ....9-23
9.6.3.5 Nitrite+Nitrate Nitrogen (NO2+NO3-N) ....9-23
9.6.3.6 Total Nitrogen ....9-24
9.6.3.7 Dissolved Oxygen ....9-24
9.6.3.8 Summary of Mixed Water – Water Quality Parameters ....9-26
9.6.3.9 Estimates of Mixing Zones and End-of-Pipe Effluent Limits ....9-28
9.6.3.10 Receiving Flows ....9-28
9.6.3.11 Effluent Flows and Mixing Estimation ....9-28
9.6.3.12 End of Pipe Limit Estimation ....9-29

9.6.3.13 Impacts to Dissolved Oxygen Due to Nutrients ....9-31
9.7 Anti-Degradation ....9-32
9.7.1 Tier I Protection ....9-33
9.7.1.1 Applicability ....9-33
9.7.2 Tier II Protection ....9-34
9.7.2.1 Applicability ....9-34
9.7.2.2 Costs ....9-34
9.7.2.3 Surface Water Sampling Program ....9-34
9.7.2.4 Temperature Compliance - Cooling Towers/Chillers ....9-35
9.8 Indirect Discharge to Surface Water ....9-36
9.9 Pipeline to a Remote Treatment Facility ....9-36
9.10 Summary and Recommendations ....9-36

Section 10: Capital Improvement Plan ....10-1

10.1 Phase 1 – Completion of tank monitoring ....10-1
10.2 Phase 2 – Creation of a Citizens Advisory Committee ....10-1
10.3 Phase 3 - Development of Facility Plan ....10-1
10.4 Phase 4 – Purchase of Plant Site ....10-1
10.5 Phase 5 – Plans, Specifications, and Estimate Preparation ....10-2
10.6 Phase 6 - Plant Construction ....10-2
10.7 Phase 7 – Collection System Construction ....10-2
10.8 Schedule ....10-2
10.9 Funding ....10-2
10.10 Anticipated Permits ....10-2

Section 11: Financing ....11-1

11.1 Yacolt Policies and History ....11-1
11.2 Funding Options ....11-1
11.3 Project Expenses ....11-2
11.4 Potential Funding Sources ....11-7
11.4.1 Washington State Department of Ecology–-Water Quality Grants and Loans ....11-7
11.4.2 US Dept of Housing & Urban Development—Community Development Block Grants ....11-7
11.4.3 US Dept of Agriculture—Community Facilities Loans ....11-7
11.4.4 Washington State Public Works Board—Public Works Trust Fund Loans ....11-8
11.4.5 Washington State Community Economic Revitalization Board—Loans ....11-8
11.4.6 State & Tribal Assistance Grant Program ....11-8
11.4.7 Washington State Transportation Improvement Board—Grants ....11-8

## Table of Contents (cont.)

11.5 Local Funding.....11-9

*References*..... *R*

## List of Tables

1-1 Technical Alternatives
1-2 Estimated Capital Improvement Costs
1-3 Proposed Project Schedule
2-1 Yacolt Septic Systems
3-1 Summary of Existing Land Uses
5-1 Projected 20-Year Population, Flow and Loads
6-1 Characteristics of the Four Classes of Recycled Water[(a)]
7-1 System Type
7-2 System Overview
7-3 Ratings – Impacts
7-4 Collection System Capital Costs
7-5 Present Worth O&M Costs
7-6 Collection System Costs – Present Worth
8-1 Treatment Technology Capabilities – Reduction of Constituents
8-2 Treatment Technologies – System Costs
8-3 Treatment Technologies – Present Worth Operation Costs
8-4 Treatment Technologies – Total Present Worth Costs
8-5 Comparison of Treatment Technologies
8-6 Solids Alternatives
8-7 Site Sizing
9-1 Annual Minimum and Maximum Groundwater Elevation, Feet Above Mean Sea Level
9-2 Preliminary Sizing Estimates for Subsurface Discharge and Rapid Infiltration Systems Based on Loading Rates
9-3 Land Application Size Requirements
9-4 Estimates of Groundwater Mounding from Effluent Discharge
9-5 Groundwater Mixing Calculations
9-6 Proposed Site Characterization Activities for the Facility Plan Evaluation
9-7 Ground Discharge Option - Costs
9-8 Flow and Water Quality Parameters for East Fork Lewis River at Dollars Corner and Estimates at Point of Discharge

## Table of Contents (cont.)


9-9 Flow and Water Quality Parameters for Wastewater Treatment Plant Effluent
9-10 Summary of Ammonia Evaluation Results
9-11: Wastewater Treatment Plant Effluent Characteristics-Streeter Phelps
9-12 Receiving Water (East Fork Lewis River) Characteristics
9-13 Mixed Water – Water Quality Parameters
9-14 Criteria for Water Quality Parameters
9-15 Flow Values and Assumptions for Critical Condition Mixing Estimates
9-16 Estimated End of Pipe Limits for Metals
9-17 Yacolt Nutrient Load Estimates – Total System Loading with Filtration and Chemical Treatment
9-18 Surface Discharge Option – Costs
10-1 Yacolt Capital Facility Plan
11-1 Wastewater Management 6- and 20-Year Program Administrative and Capital Expenses
11-2 Yacolt Capital Facility Plan
11-3 Monthly Service Fees with System Development Charges/Fees
11-4 Projected Capital with $7,500 SDC


## List of Figures


1 Vicinity Map
2 General Topography and Zoning
2a Comprehensive Plan Zoning
3 Water Systems
4 Proposed Sewers
5 Potential Plant and Discharge Locations
6 Subsurface Discharge Locations
8.1 Packaged Membrane Systems (MBR) (Courtesy: Enviroquip)
8.2 Packaged Biological Nutrient Removal System (Aeromod)
8.3 Recirculating Media Filter
8.4 Recirculating Media Filter (Advantex)
8.5 Biolac Lagoon Systems (Courtesy Parkson Corporation)
9-1 Static Water Level, feet below ground surface
9-2 Nitrate-N + Nitrite-N concentrations in MW-1, MW-2, and MW-3

## Table of Contents (cont.)

## List of Appendices


Appendix A Private & Public Well information
Appendix B Technical Memos and County Right of Way Use
Appendix C Collection System Vendor Information
Appendix D Agency Support Letters
Appendix E SEPA Checklist
- SEPA Response letter – Clark County – Dept of Community Development
- SEPA Reply letter to Clark County – Dept of Community Development

Appendix F Cost Quotes for Treatment Facilities
Appendix G 2003 Clark Public Utilities Wellhead Protection Plan
Appendix H Discharge Calculations
- Surface Water Quality Parameters
- Streeter Phelps model for dissolved oxygen


## List of Acronyms

| | |
|---|---|
| °C | degrees Celsius |
| 7-DADMax | seven-day average of the daily maximum temperatures |
| AKART | all known, available, and reasonable treatment |
| bgs | below ground surface |
| BOD | Biochemical Oxygen Demand |
| CAS | Conventional Activated Sludge |
| CCPH | Clark County Public Health |
| CFR | Code of Federal Regulations |
| CPU | Clark Public Utilities |
| CWA | Clean Water Act |
| DNS | Determination of Non-Significance |
| Ecology | Washington State Department of Ecology |
| EPA | Environmental Protection Agency |
| EQ | Exceptional Quality |
| ERU | equivalent residential unit |
| FTE | Full Time Equivalent |
| GMA | Growth Management Act |
| gpcpd | gallons per capita per day |
| gpd | gallons per day |
| gpm | gallons per minute |
| I&I | infiltration and inflow |

## Table of Contents (cont.)

## List of Acronyms

| | |
|---|---|
| LA | Load allocations |
| LOSS | Large On-Site Septic System |
| MBR | Membrane Bioreactor |
| mg | million gallons |
| mg/L | milligrams per liter [mg/L |
| NPDES | National Pollutant Discharge Elimination System |
| NTU | nephelometric units |
| O&M | Operations and Maintenance |
| OD | Oxidation Ditch |
| OFM | Washington State Office of Financial Management |
| PD | pressure distribution |
| Perc | Percolation test |
| PFRP | processes to further reduce pathogens |
| PSRP | Process to significantly reduce pathogens |
| pH | Power of hydrogen |
| pph | Person per household |
| RCW | Revised Code of Washington |
| RMF | Recirculating Media Filters |
| SBR | Sequencing Batch Reactor |
| SEPA | State Environmental Policy Act |
| sf | square feet |
| SRF | Washington State Ecology Water Quality State Revolving Fund |
| SRT | Solids retention time |
| STEG | Septic Tank Effluent Gravity |
| STEP | Septic Tank Effluent Pump |
| TMDL | total maximum daily load |
| Town | Town of Yacolt |
| TSS | Total Suspended Solids |
| UGA | urban growth area |
| UV | ultraviolet |
| WAC | Washington Administrative Code |
| WLA | waste load allocations |
| WWTP | Wastewater Treatment Plant |
| Yacolt | Town of Yacolt |

## WAC 173-240 Key Locator List

Items required for General Sewer Plans and locations

| WAC Requirement | Section | Subsection |
|---|---|---|
| The purpose and need for the proposed plan. | 1-Executive Summary | 1.1-1.3 |
| A discussion of who will own, operate, and maintain the systems. | 3-Existing Conditions & Service Area | 3.2 |
| The existing and proposed service boundaries. | 3-Existing Conditions - Service Area & Appendix Figures | 3.6-3.7 Figure 1,2 |
| Layout map including the boundary lines of the municipality or special district to be sewered, including a vicinity map | Appendix | Figure 1,2 |
| Layout map including the location, size, slope, capacity, direction of flow of all existing trunk sewers, and the boundaries of the areas served by each and the location of all existing and proposed pumping stations and force mains, designated to distinguish between those existing and proposed. | NA-No existing sewers | |
| Layout map including the location, size, slope, capacity, direction of flow of all proposed trunk sewers, and the boundaries of the areas to be served by each | No trunk sewers - Appendix | Figure 4 |
| Layout map including the topography showing pertinent ground elevations and surface drainage must be included, as well as proposed and existing streets | Appendix | Figure 2 |
| Layout map including the streams, lakes, and other bodies of water. The location and direction of flow of major streams, the high and low elevations of water surfaces at sewer outlets, and controlled overflows, if any. All existing and potential discharge locations should be noted. | Appendix | Figure 5 & 6 |
| Layout map including the location of wells or other sources of water supply, water storage reservoirs and treatment plants, and water transmission facilities. | Appendix | Figure 3 |
| The population trend as indicated by available records, and the estimated future population for the stated design period. Briefly describe the | 5-Population, Flow & Load | 5.1-5.2 |

| WAC Requirement | Section | Subsection |
|---|---|---|
| method used to determine future population trends and the concurrence of any applicable local or regional planning agencies. | | |
| Any existing domestic or industrial wastewater facilities within twenty miles of the general plan area and within the same topographical drainage basin containing the general plan area. | 3-Existing Conditions | 3.3 & 3.8 |
| A discussion of any infiltration and inflow problems and a discussion of actions that will alleviate these problems in the future. | NA | |
| A statement regarding provisions for treatment and discussion of the adequacy of the treatment. | 1-Executive Summary & 2-Introduction | 1.4 & Section 2 |
| List of all establishments producing industrial wastewater, the quantity of wastewater and periods of production, and the character of the industrial wastewater insofar as it may affect the sewer system or treatment plant. Consideration must be given to future industrial expansion. | 3-Existing Conditions | 3.3 & 3.8 |
| Discussion of the location of all existing private and public wells, or other sources of water supply, and distribution structures as they are related to both existing and proposed domestic wastewater treatment facilities. | 3-Existing Conditions & Appendix | 3.11, Figure 3, Appendix A |
| Discussion of the various alternatives evaluated, and a determination of the alternative chosen, if applicable. | 7-9 Collection, Treatment & Discharge | Sections 7-9 |
| A discussion, including a table, that shows the cost per service in terms of both debt service and operation and maintenance costs, of all facilities (existing and proposed) during the planning period. | 11-Financing | Section 11 |
| A statement regarding compliance with any adopted water quality management plan under the Federal Water Pollution Control Act as amended. | 2-Introduction – Need | 2.2-2.3, 2.5 |
| A statement regarding compliance with the State Environmental Policy Act (SEPA) and the National Environmental Policy Act (NEPA), if applicable. | 3-Existing conditions – Need; Appendix | 3.5 and Appendix E |

**Key Locator List:**
**Other Items Requested by Ecology**

| Item | Section | Subsection |
|---|---|---|
| Identify a specific discharge option including location and timing for direct discharge to ground year round near the north side of the Town of Yacolt | 9-Effluent Discharge | 9.5 and Appendix G |
| Develop a list of data and a sampling plan that will outline data necessary to support year round discharge | 9 – Effluent Discharge | 9.5.1.6 and 9.7.3.1 |
| Identify a specific discharge option including location and timing for surface water discharge to East Fork of Lewis River vicinity | 9-Effluent Discharge | 9.6 |
| Evaluate mixing zones for both the confluence (Big Tree/Yacolt Creek) discharge and the East Fork discharge. | 9-Effluent Discharge | 9.6.3.9 & 9.6.3.11 |
| Identify a specific discharge option including location and timing and based on the recommended option, review feasibility for the discharge option. | 9-Effluent Discharge | 9.6-9.7 |
| Determine levels of nitrogen within the receiving waters (both groundwater and surface water) and projected nitrogen discharge. Discuss reduction in conformance with water quality criteria-anticipated to be within the range of 2-10 milligrams per liter (mg/L) for discharge | 9-Effluent Discharge | 9.5-9.7 |
| Determine levels of phosphorus within the receiving waters (both groundwater and surface water) and projected phosphorus discharge and reduction in conformance with water quality criteria-anticipated within the range of 0.1-1 mg/L. | 9-Effluent Discharge | 9.5-9.7 |
| Determine the dissolved oxygen (DO) demand based on the nutrients above as well as DO impacts in the receiving stream using the Streeter Phelps model. | 9-Effluent Discharge | 9.5-9.7 |
| Review other pollutants of concern discussed in the Ecology Permit Writers Manual. Review current stream loadings and develop load allocation. | 8-Treatment, 9-Effluent Discharge | 8.1.6.1, 9.5.1.6, 9.6.3.12, 9.7.3.1, Table 9.14 |
| Establish the approximate effluent limits for the | 9-Effluent | 9.7.3.1 |

| Item | Section | Subsection |
|---|---|---|
| proposed plant that will not impair the receiving waters. | Discharge | |
| Discuss pollutants within the East Fork and a plan for sampling and testing. | 9-Effluent Discharge | 9.7.3.1 |
| Expand the discussion on the anticipated plant capacity needs related to service area and population growth from inception through a twenty year growth scenario. Identify projected initial plant installation and projected expansion timing and possible phasing over a twenty year period. | 1-Executive Summary, 5-Population, Flow, Load, 8-Treatment, 10-Capital, 11-Financing | 5; 8; 10; 11 |
| Determine the level of treatment required to obtain the discharge parameters above, and identify the treatment facilities that will provide the required quality. | 8-Treatment; 9-Discharge | 8.1.6, 9.6.3.8 |
| Based on the discharge, determine the sizing criteria for the treatment plant components including HRT, MCRT, MLVSS concentration and F:M ratio for the selected/recommended alternative. | 8-Treatment, Appendix C | 8.1.8, Appendix C |
| Determine the lowest cost treatment option that provides the level of treatment necessary to meet discharge requirements; update and expand on facility costs and acreage needs. | 8-Treatment, 9-Discharge | 8.1.8, Table 8-2 – 8-5, 8.4, 9.5.1.2, 9.5.1.8, 9.7.2.2 |
| Analyze any other factors that may be of interest to the Town - aesthetics, expandability, public perception and potable water impacts. | 11-Financing. A sustainability audit will be included in the Facility Plan | 11 |
| Expand and update the ranking of technology and plant options including capital costs, O&M costs and ease of operation. | 8-Treatment | 8.1.6-8.3 |
| Expand on the recommend treatment technology option based on the items listed above. | 8-Treatment | 8.1.6-8.3 |
| Discuss and develop an agreement with the potable water purveyor and determine the potential impacts to potable water. | 1-Executive Summary, 2-Introduction, 4-Previous Studies, 9-Discharge | 1.2, 2.1, 2.2, 4.3 |

| Item | Section | Subsection |
|---|---|---|
| Develop an agreement with the County or private property owner for right of way use for a direct discharge installation. | Appendix | Appendix B |
| Review other anti-degradation requirements on Ecology website in conjunction with WAC 173-201A based on the applicable tier (I-III). | 9-Discharge | 9.7.1 |
| Review and comply with any well head protection program for the Yacolt wells. | 9-Discharge & Appendix | 9.5.1.7, Appendix G |

# Section 1: Executive Summary

The Town of Yacolt (Yacolt) is in the planning phase of moving forward with the transition from septic systems to sanitary sewer service. This report is based on the Clark County Comprehensive Plan Update – 2004 (adopted 2007). Yacolt has prepared this Comprehensive General Sewer Plan for submittal and approval as a necessary step in order to move forward with urban development within the Town. In accordance with Revised Code of Washington (RCW) 90.48.110 and Washington Administrative Code (WAC) 173.240, this document meets all of the requirements for approval by the Washington State Department of Ecology.

## 1.1 Existing Area

Yacolt's incorporated area is currently comprised of 315 acres, with a population of 1470 and approximately 500 dwelling units (physical count of 527 including multiple dwellings). There are 12 commercial establishments within the Town limits, one public school and three industrial users (with only domestic discharge).

## 1.2 Current Treatment

Yacolt is currently served by a public potable water supply. The Town does not have a centralized sewer system but does have individual septic systems. Yacolt has adopted inspection policies for their existing septic system users. Clark County updated their criteria for septic systems in 2007 in conjunction with revisions to the Washington State Revised Code chapter 70. Yacolt has a more restrictive policy in place requiring the use of higher level treatment than the minimum level (of soil condition) would require. This requirement is applicable to any repairs and for all new lots. In 2004, Clark Public Utilities (CPU) obtained funding for an inspection program and performed inspections and contracted installation of inspection ports onto participant's tanks. These systems within Yacolt continue to be monitored by the Town. Clark County has a mandatory inspection policy for all septic systems within the County, requiring three year inspections for traditional (gravity septic) systems and annual inspections on all non-traditional systems. Yacolt has gone with bi-annual inspections on standard gravity installations and annual on all non-traditional systems. These inspections are performed either by Yacolt, for those property owners that participated in the 2004 program, or by a private contractor for all denitrification systems, and are ultimately monitored by Clark County Public Health. Yacolt plans to make their more stringent policy mandatory for all residents, requiring participation in their inspection and riser installation program in the near future.

## 1.3 Basis of Future Need

Clark County is projected to continue growing at approximately two percent per year (see Section 5). This is consistent with the Office of Fiscal Management (1.8-2.2 percent) projection that the County used as their basis for the 2007 Growth Management Act (GMA) update. This Plan was developed using two percent annual growth for Yacolt projections. Based on two percent growth over the next 20 years, it is projected that Yacolt will have a year 2029 population of 2,228 and an equivalent effluent discharge of 290,000 gallons/day (average wet

weather flow) with an equivalent population of 3,000. It is anticipated that loadings for biochemical oxygen demand (BOD) and total suspended solids (TSS) will be 540 lb/day (using .2 lb/day per person – Washington State Department of Ecology Criteria for Sewage Works Design Manual). These are the values for which the system will be designed. We have sized the improvements to provide at least 20 years of capacity based on proposed and anticipated growth rates. These improvements will serve the projected 20 year growth of approximately 300 additional equivalent units. This growth would increase the town's population by 50% and would use approximately 25% of the Urban Reserve acreage available. The Facility Plan design will be developed with a layout of units for doubling of capacity. With the anticipated growth in Yacolt, this should easily serve the community for well over twenty years, even if growth picks up from current levels.

## 1.4 Recommended Improvements

Yacolt plans to construct a local wastewater treatment facility to service their entire urban growth area (UGA). A range of alternatives were examined for wastewater collection, liquid treatment, solids treatment, and discharge. These alternatives are listed in Table 1-1 and described in Chapters 7, 8 & 9, with the preliminary recommendations in ***bold italic*** below and secondary recommended technologies that will be reviewed during the Facility Plan are in **bold** below.

**Table 1-1: Technical Alternatives**

| Collection | Liquid Treatment | Solids Treatment | Effluent Discharge |
|---|---|---|---|
| Gravity sewer | Conventional | Aerobic Digestion (Class B) | LOSS |
| **Septic Tank Effluent Pump (STEP)** | ***Biolac lagoon system*** | Sludge Drying (Class A) | Surface Irrigation & Storage |
| Septic Tank Effluent Gravity (STEG) | Recirculating media (gravel or Advantex) filters | **Regional Solids Facility Participation** | ***Subsurface Discharge to groundwater.*** |
| ***Vacuum system*** | Biological Nutrient Removal system | ***Facultative Sludge Lagoon*** | **Direct discharge to surface water** |
| Grinder system | **Membrane Bioreactor (MBR)** | | Pump-pipe to Battle Ground |

Initial selection of technology for providing sewer service to Yacolt residents and businesses are as follows:

- **Collection**: The vacuum system has a low capital cost and greatest ease of operation and maintenance. The Town has selected this alternative as the preferred choice. It is proposed that this preferred choice along with the second choice of a septic tank effluent pump system (STEP) both be further evaluated during the Wastewater Facility Planning process to confirm the most cost effective and appropriate technology is selected for the Town.

- **Liquid Treatment**: A Lagoon (Biolac) treatment system is the least expensive of the treatment options considered, and offers operational simplicity. It is proposed that both the Biolac system and the second choice – a Membrane Bio Reactor be considered for further investigation of treatment options as part of a Wastewater Facility Plan to ensure compatibility with effluent discharge permit requirements and space/site constraints. The Biolac appears to have a cost and simplicity advantage, even with the addition of screening whereas the MBR system has treatment and water quality advantages.

- **Solids Treatment**: The initial selection of solids technology is to construct a Facultative Sludge Lagoon for storing and treating waste solids. The town would contract for periodic dredging and disposal. This alternative will be compared with potential regional solids discharge opportunities during the Facility Plan process to confirm that a Facultative Sludge Lagoon is the least cost alternative. While the regional solids option is attractive, it could be substantially more expensive.

- **Discharge**: The discharge alternative that has the most promise with regard to cost, effectiveness and permitability is a subsurface discharge to groundwater. Additional sampling and testing will be provided during the Facility Plan preparation to verify this option. The second option would be a direct discharge to surface water, into the East Fork of the Lewis River. This option has proven attractive to local special interest groups based on the ability to supplement summer flows. In addition to surface water benefit, the treated effluent provides an opportunity for Yacolt to improve groundwater quality by removing septic systems from the basin reducing nitrate levels. The preferred location is to discharge at the south edge of town if soil conditions are suitable. It may be necessary to use a combination of the two discharge options; however, on the basis of costs, this analysis will be done if either of the options are not feasible as a year round alternative.

In conjunction with the major functions of the wastewater system, it is anticipated that the system will include preliminary treatment of screening and grit removal, disinfection by ultra-violet (UV) treatment and associated facilities such as electrical, flow measurement, sampling, and stand-by power facilities. Sludge levels will be monitored and removal will be contracted as necessary. Pump stations will be installed, if necessary, but gravity flow is expected to be used throughout the system. A small laboratory/ maintenance facility will be constructed for required daily tests, but the majority of testing will be contracted. With the topography of the valley (both the existing urban growth area and remainder of the valley), the Town could ultimately serve the entire valley in the future, so siting will be as far south as possible.

## 1.5 Project Costs

Following adoption of this General Sewer Plan, Yacolt will proceed immediately with the completion of a Facilities Plan so that they can move forward with obtaining funding support for design and construction. It is anticipated that costs for capital improvements will be in the following range:

For those project components where two alternatives with different estimated costs are recommended for further study during Facility Planning, the higher cost is shown. The

recommended overall budget for planning purposes is based on the higher end of the range, as shown in Table 1-2.

**Table 1-2: Estimated Capital Improvement Costs**

| System | Cost |
|---|---|
| Collection systems | **$8,407,000** |
| Treatment systems | **$4,500,000** |
| Solids, Site, Other Treatment Components | **$1,500,000** |
| Discharge system | **$4,485,000** |
| Permitting | **$1,000,000** |
| Including planning costs | **$20,242,000** |
| **Recommended Budget for Funding Purposes** | **$19,892,000** |

## 1.6 Project Schedule

Although the exact schedule will be dependent upon funding, permitting and public support, a tentative proposed schedule has been developed as follows:

**Table 1-3: Proposed Project Schedule**

| Effort | Timing |
|---|---|
| GSP submittal | April, 2009 |
| GSP re-submittal | September, 2010 |
| GSP re-submittal | January, 2011 |
| Ecology approval of GSP | February, 2011 |
| Discharge sampling | 2011 |
| GSP Adoption by Yacolt | March, 2011 |
| Initial Facility Plan Funding | Summer, 2009 |
| Facility Plan development | 2011 |
| Adoption of Rates and Fees | 2011 |
| Plant site purchase | 2011 |
| Initial Funding Calculation | Fall, 2011 |
| Facility Plan submittal to Ecology | Winter, 2011 |
| Ecology approval of Facility Plan | Spring, 2012 |
| Funding applications | 2012-2015 |
| Project design | 2013-2014 |
| Construction | 2015-2016 |

## 1.7 Funding

Yacolt, as a small community, will need to explore all available opportunities to fund their wastewater improvements. Yacolt may qualify as both a rural area and as a low income area. Public grant and loan funding will be a necessity for meeting the above schedule. Expeditious review and approval of planning documents by Ecology will support the application process for public funding.

# Section 2: Introduction – Basis for Need

## 2.1 Background

The Town of Yacolt (Yacolt) is a community of 1,470 (2008 projection by Washington State Office of Financial Management [OFM]) located in North-Central Clark County Washington (see Figure 1). Located within a valley in the foothills of the Cascade Mountain range, Yacolt is currently served by septic systems for its wastewater needs. The Town's Urban Growth Area (UGA) makes up approximately one third of the valley (See Figure 5). While Yacolt is currently served by septic systems, there are concerns that groundwater recharge by these septic systems may result in an eventual negative impact to groundwater and area wells. Yacolt has required the modification of installations of septic systems for all new or repaired septic systems. Their current requirements are as shown in the table below:

**Table 2-1: Yacolt Septic Systems**

| Type of System | Availability | Usage |
|---|---|---|
| Standard Gravity | Can only be used where perc tests allow and on lots >18,000 sf | Some still in place but few new installations |
| Pressure distribution (PD) | Minimal level accepted level by Yacolt with approved perc for a gravity installation | Some new installations being constructed |
| Sand Filter – Aerobic | Acceptable based on perc tests at the PD level. | Minimal installations with some existing |
| Nutri-Clear nitrogen reducing | Current installation for new developments – supplier doing maintenance inspections. | Used in all of the recent new developments (~ 100 lots) |

**Notes:**
Perc = Percolation test
sf – square feet

While the Nutri-Clear septic systems provide improved treatment and some nitrogen removal, there is still the concern that nitrate levels could rise in the groundwater. This is one reason that Yacolt is pursuing development of a General Sewer Plan. In the 2006-2007 Growth Management Act (GMA) Update performed by Clark County, the County mandated approval of a General Sewer Plan in order for the Town to annex the remaining UGA into its corporate limits. This is another reason that Yacolt is pursuing development of a General Sewer Plan.

The Yacolt Town Council adopted its first Comprehensive Land Use Plan on April 4, 1977. In November, 1994 Yacolt adopted the Town of Yacolt Comprehensive Growth Management Plan in conjunction with the initial Clark County Comprehensive Growth Management Plan. The Yacolt plan was updated in 2003 in response to Revised Code of Washington (RCW) amendments and adopted in 2004.

In 2005, Clark County began the updating process as required by the GMA. This process went through two complete iterations (2006 & 2007). Clark County planning policies adopted in

conjunction with their most recent (2007) update in Chapter 7 of the Clark County Comprehensive Plan update include the following:

- The county, municipalities, special districts and health department will work cooperatively to develop fair and consistent policies and incentives to: eliminate private water and sewer/septic systems in the urban areas; and to encourage connection to public water and sewer systems.
- Within Urban Growth Areas, cities and towns should be the providers of urban services. Cities and towns should not extend utilities without annexation or commitments for annexation. Exceptions may be made in cases where human health is threatened. In areas where utilities presently extend beyond city or town limits, but are within Urban Growth Areas, the city or town and the county should jointly plan for the development, with the county adopting development regulations which are consistent with the city or town standards.

Yacolt signed a Memo of Understanding with Clark County Community Development in the spring of 2010 authorizing Clark County to update their Comprehensive Land Use Plan. This work will be performed in 2010 and 2011.

## 2.2 Yacolt 2004 Policies

In conjunction with the County planning policies, the Town of Yacolt adopted the following policies related to land use and capital facilities and utilities.

Policy 1-3 Protect the underlying aquifer from contamination to help assure a safe supply of public drinking water.

Policy 1-4 New residential development or redevelopment should provide adequate public right of way, street, stormwater control, water, and wastewater facility improvements, among other capital improvements that directly serve the new development.

Policy 8-1 Develop and implement a comprehensive program for the location and construction of community facilities and utilities.

Policy 8-3 Ensure that any development proposed for the community is contingent upon the availability of public facilities and services necessary to support the development, and that these facilities and services are available concurrent with the occupancy or use of the development.

Policy 8-4 Coordinate with the county to ensure that public facilities and services are provided in a manner that is consistent with adopted comprehensive plans.

Policy 8-5 Establish a process to re-evaluate the land use element of the comprehensive plan upon determining that adequate financial resources do not exist to provide necessary public facilities and services to implement the plan.

Policy 8-6 Consider the establishment of impact fees and system development charges as a method of financing public facilities required to support new development.

Policy 8-7 Continue to update the six-year capital facility program that is contained within this element of the comprehensive plan.

Policy 8-8 Include in the six-year capital facility program capital projects exceeding $10,000 that are generally identified in the comprehensive plan. Capital improvements costing less than $10,000 and certain costly administrative activities may be considered for inclusion in the program.

Policy 8-9 Ensure that projects presented in the capital facilities program are consistent with the adopted comprehensive plan, as required by RCW 36.70A.120.

Policy 8-10 Utilize the following criteria as a guide in evaluating and ranking proposed capital facility projects:

- Public health and safety protection
- Private property protection
- Environmental protection and natural resources conservation
- Statutory or other legal requirements
- Level of Service compliance
- Facility deficiency correction
- Obsolete facility replacement
- Community growth and development support
- Operating cost reduction
- Financial feasibility
- Outside funding availability.

Policy 8-12 General obligation debt on public facility improvements shall not exceed 2.5 percent of the assessed value of the taxable properties within the town limits.

Policy 8-13 Seek funding support for capital facility projects by engaging staff in monitoring viable state and federal programs, and developing applications for financial assistance. Technical assistance shall be sought from Clark County, Clark Public Utilities, and other public agencies in developing plans, strategies and applications for outside funding assistance.

Policy 8-15 Seek funding assistance to advance elements of Yacolt's wastewater management program, including the design and construction of a public sanitary sewer system.

Clark County made the following statement in their 2007 adopted Growth Management plan:

> 1.2.14 The Yacolt Urban Growth Boundary will be reevaluated by Clark County at such time as the Town of Yacolt develops a plan assuring that public sewer will be available.

As a result of the 2007 Clark County Growth Management Plan Update, and the need to have provisions for sanitary sewer service in order for further annexation to take place, the Town of Yacolt is moving forward with the development of this General Sewer Plan.

## 2.3 Purpose

The purpose of this General Sewer Plan for the Town of Yacolt is to define the basic selection for a centralized sewer system within the Town. This plan is developed in conformance with the requirements of the Revised Code of Washington (RCW) 90.48.110 and the Washington Administrative Code (WAC) 173-240 and the Washington State Department of Ecology's Criteria for Sewage Works Design. Following the approval of this plan by the Washington State Department of Ecology (Ecology), the Town will begin the second step which is the development of the Facilities Plan for the Town of Yacolt.

## 2.4 Planning Period

The planning period for this General Sewer Plan shall be 20 years from initiation of the planning effort: 2009 – 2029.

## 2.5 Scope and Organization

The General Sewer Plan for the Town of Yacolt will include all of the required information as described in WAC 173-240 and the Criteria for Sewage Works Design (2007 manual). The organization of the General Sewer Plan is as follows:

- **Section 1: Executive Summary:** overview of the Plan's contents, findings, and recommendations.
- **Section 2: Introduction – Basis for Need:** describes the drivers behind the Plan
- **Section 3: Existing Conditions and Service Area:** discusses existing land uses and compliance
- **Section 4: Previous Studies:** describes past studies within the Yacolt area
- **Section 5: Population, Flow and Load Projections:** Outlines the 20 year projections
- **Section 6: Regulatory Requirements:** Provides an overview of regulations
- **Section 7: Collection System:** outlines the technologies and initial recommendations
- **Section 8: Treatment**: outlines the technologies and initial recommendations
- **Section 9: Discharge:** outlines options and recommendations
- **Section 10: Capital Facility Plan**: describes the projected costs and schedule
- **Section 11: Finances**: discussion of funding need and sources

# Section 3: Existing Conditions and Service Area

## 3.1 Local Area Sewer Service

There are no sanitary sewer facilities within the Yacolt valley. Adjacent urbanized areas include Amboy (served by septic systems to the northeast) and the City of Battle Ground to the southwest. Amboy is considered a 'census' designated place by the census bureau, but has no urban classification within Clark County. The closest existing sewer system to the Yacolt area is the City of Battle Ground, approximately nine miles SW (14 miles along existing public right-of-way) from Yacolt. Battle Ground currently has a collection system and equalization basin, but transmits flows to the Clark County Salmon Creek Treatment Plant for treatment. Battle Ground has a small industrial area, with the City and the Clark Regional Wastewater District providing oversight of the pretreatment program.

## 3.2 Yacolt Ownership & Operation

Yacolt plans to own, operate and maintain their proposed sanitary sewer system and plant upon completion of construction. However, they are currently participating in a County-wide planning study that is reviewing the option of a County-wide sanitary sewer utility that could take over ownership and operation of the systems within the smaller jurisdictions. Yacolt is not averse to this opportunity and will continue to pursue information and benefits relating to this option.

## 3.3 Industrial Lands

There are two properties located within the current UGA that have industrial uses. Both of the properties are zoned commercial with a legal non-conforming designation. All discharge that is generated on these properties is domestic. The uses shown below are storage facilities only and generate no industrial discharge.

There is one area zoned industrial, located along the east side of the Town limits, outside of the current incorporated town (but within the UGA). This property has one current industrial use as a communication facility but is unoccupied and generates no discharges.

## 3.4 Water Quality Management

There is currently no water quality management plan for this area. There is a WRIA 27 and 28 Watershed Management Plan (2006) and The East Fork Lewis River Water Quality Study (Clark County) that have been developed. The East Fork Lewis River Water Quality Study (Clark County, 1995) recommended onsite wastewater system inspection and maintenance programs for Yacolt and other areas. This effort has been underway in conjunction with state, county, and town requirements. Modeling and planning related to total maximum daily loads (TMDLs) – primarily for temperature for the East Fork of the Lewis River, is underway but will probably not be completed until 2010. Yacolt is participating in the planning process and will be included as a point load on the East Fork at the Yacolt Creek-Big Tree Creek connection point.

## 3.5 State Environmental Policy Act (SEPA)

A State Environmental Policy Act (SEPA) checklist and Determination of Non-Significance (DNS) has been circulated and is attached to this document with all comments that were received and applicable responses where necessary.

## 3.6 Planning Area

The Town of Yacolt (incorporated area) is 315 acres, with a population equivalent (2009) of 1970. Within the current Town UGA, there are 362 acres. There is currently an estimated 85 acres of undeveloped residential land within the current UGA. It is estimated that this will yield 77 developable acres. Average household size in Yacolt is 3.31 people (2000 census). 325 acres adjacent to the current boundaries was added to the UGA in 2007 under an Urban Reserve Designation. See Section 3.9 for further discussion.

## 3.7 Land Uses

Yacolt, as an urban area, has both urban zoning as well as rural zoning in the unincorporated area (see Figure 2). The Comprehensive Plan designations include urban uses only (see Figure 2a).

### 3.7.1 Residential

There are approximately 500 single family residential units located within the UGA. A typical residential lot is 12,500 square feet (sf); however, lots range from 5,000 sf to 18,000 sf. All new development is required to have a minimum lot size of 12,500 sf provided that soil conditions support septic systems. There are approximately five multi-family dwelling units in Yacolt (three duplexes, one triplex, and one seven-unit apartment complex), containing a total of 16 units.

### 3.7.2 Public Facilities

Public buildings and structures comprise a total of approximately 71 acres within the UGA. Yacolt, Clark County, North Country Emergency Medical Service, Battle Ground School District, CPU, and the Postal Service own facilities. Plans are underway for a community center and a wastewater treatment plant. Specific space requirements and sites for these new public facilities have yet to be determined. No land has been designated for these facilities at this time.

The Yacolt Primary School has a large On-Site Septic System (LOSS) with a pressure distributed drainfield regulated by the Department of Health. The system was designed for 825 people and a flow of 5,200 gallons/day.

### 3.7.3 Commercial

There are 33 acres of commercially zoned land in the incorporated area. Currently, ten acres are improved. There are 12 commercial establishments in the town, which are located on lots comprising the ten acres. Most of these commercial activities are small retail and service operations catering to local markets. They are clustered in the core area of the town near the intersection of W Yacolt Road and Amboy Avenue. Four churches are located within the community.

### 3.7.4 Industry

There are two small-scale light industrial operations within the town limits. They consist of storage for well drilling equipment and a shop. These ‘industries’ operate as legal nonconforming uses within an area designated for commercial activity. The only industrial operation/activity is the three-acre satellite telecommunications relay facility, which is located on a twenty-acre site immediately east of the town limits within the UGA but currently outside of the Town’s incorporated limits. This parcel is zoned light industrial.

## 3.8 Industrial Wastes – Pretreatment Needs

Discharge is limited to residential sewage flowing into standard drainfields for all of the uses. There are no current industrial discharges. There is no plan for any industrial discharges from existing facilities. Consequently, there is no plan at this time for pretreatment of industrial wastes. Future industrial uses (zoning is Light Industrial) could occur; however, due to the limited access and limited available property, it is anticipated that any additional industrial use will produce domestic wastewater only.

## 3.9 Urban Reserve

In the Clark County GMA update process (2007), an additional 325 acres of land adjacent to the current UGA/Town limits was added to the new Yacolt UGA. This land was placed within an Urban Reserve designation. Urban Reserve allows for annexation provided certain criteria is achieved. Within Yacolt, the criteria established by the County and supported by Yacolt is that a plan must be developed for sanitary sewer service before annexation of the lands within the Urban Reserve designation is allowed.

## 3.10 Open Space – Parks

Yacolt has three public parks: Town Park (2 acres), the Ball fields (11 acres but only 3.5 acres within the UGA), and open space along the western margin of the Yacolt Primary School property (6 acres). These parks comprise a total of approximately 19 acres (11.5 within the UGA).

**Table 3-1: Summary of Existing Land Uses**

| Land Use | Acres | | |
|---|---|---|---|
| | Town Limits | Unincorporated UGA | UGA |
| Residential | 85.6 | — | 85.6 |
| Commercial | 10 | — | 10 |
| Industrial | 1 | 10 | 11 |
| Public Facilities | 65 | 6.5 | 71.5 |
| Parks | 5.5 | 13.5 | 19 |
| Forest and Agriculture | 55 | — | 55 |
| Vacant/ Undeveloped | 94 | 15.9 | 109.9 |
| Urban Reserve | | 325 | |
| ***Total*** | **316.1** | **370.9** | **687** |

## 3.11 Water

The Town of Yacolt is served with potable water by the Clark Public Utility District (see Figure 3). Water comes from a shallow unconfined aquifer – the Yacolt Aquifer. The Town has a well field at the north end of town adjacent to the baseball fields, north of the commercial zoned area along W Christy Street east of North Amboy Road. There are four wells on this site, with service for the Town provided extensively from a single well (#7, new well identification is 407) at 300 gpm (note: although this Plan refers to the Town municipal supply wells with single digit designations, CPU now refers to the active municipal supply wells as well numbers 403 through 407, corresponding respectively to well numbers 3 through 7). The remaining wells include monitoring wells and two low producing municipal wells (#1 [401] and #2 [402]) that are no longer used.

There is also a single public well (as well as two abandoned wells) located at the Yacolt Town Park on West Humphrey Street, west of North Amboy Avenue. This well is used periodically with flow alternated from this site and well #3 (403). This well is approximately 128 feet deep, producing 100 gpm.

Two concrete storage reservoirs, with 500,000 gallons (1975) and 300,000 gallons (1991) capacity are located west of the UGA to balance water pressure needs for the Town.

Service to the Town is provided by two-inch to eight-inch waterlines virtually all located within public right-of-way. All homes and businesses are on CPU provided potable water. There is an intertie with other CPU sources, providing emergency flows if necessary.

There are seven recorded public wells and five recorded private water wells within the existing Town limits/UGA, with another four public wells and four private wells located within the Urban Reserve area. Complete well information within the Yacolt valley is included in Appendix A.

The locations being reviewed for siting of the wastewater plant are not adjacent to any public or private wells.

## 3.12 Groundwater

Depth to groundwater in the area ranges from a few feet to more than 100 feet below ground surface (bgs) depending on location and season. The shallow groundwater occurs in the southern portion of the valley and the deeper groundwater is in the north. There is no low permeable barrier within the valley so the ground water is influenced by all activity (rainfall, septic systems etc) within the valley. Recharge of the groundwater level generally occurs within the first three-months of the beginning of the winter rain season (November-January).

## 3.13 Surface Water

The valley is surrounded by four creeks (see Figure 5); Cedar Creek runs west along the north edge of the valley draining to the North Fork of the Lewis River; Yacolt Creek runs south along the west side of the valley; Weaver Creek and Big (Tree) Creek run along the east side of the valley proceeding south where they tie in with Yacolt Creek before becoming part of the East

Fork of the Lewis River. The entire valley drains to the south. The Yacolt Hydrogeologic Study by Hart Crowser 1996 does not anticipate that the upper reaches of Yacolt and Weaver Creek are ever in direct connection with the aquifer; however, the lower reaches are in connectivity and as the water table rises additional upstream lengths of the Creeks are in contact with the water table.

## 3.14 Climate

The Yacolt area lies within a valley and experiences mild weather influences. The Town averages 80 inches of rain per year and receives up to 20 inches of snow per year. Temperatures vary from 0 to 100 degrees Fahrenheit with normal average temperatures of 65 in the summer and 45 in the winter.

## 3.15 Topography

The Town is located in a valley at elevation 690 to 710 feet surrounded by hills reaching 1000 feet in elevation. The hills are forested with conifers, while the valley is primarily grassland.

## 3.16 Soils

The U. S. Geological Survey map for the Yacolt area shows that the valley floor sediments are glacial outwash deposits which consist of poorly consolidated pebbly to cobbly gravel to sand, with clay layers and discontinuous deposits throughout the valley. Based on well logs on file with the Washington Department of Ecology (Ecology), the subsurface is dominated by clay and clay mixtures, to depths generally ranging between five and 30 feet. Deeper material in the area tends to be rocky or sandy. Patterns for the depth and thickness of this clay layer were not evident from well log descriptions.

The soil survey for the Yacolt area shows that silt loam soils overlying the glacial outwash textures predominate in the top five feet of soil for much of the valley. Some areas along Yacolt, Weaver, and Cedar Creeks, and along the railroad tracks, have loam to stony loam soil textures.

# Section 4: Previous Studies

The following sewer studies have been performed for the Town of Yacolt during the past 30 years:

- Town of Yacolt General Sewer Plan by EES Consulting, February, 2002.
- Preliminary Alternative Feasibility Study for the Yacolt Wastewater Management Committee by Clark Public Utilities and Clark County Department of Community Development, December, 1999
- Yacolt Sewer Feasibility Study by Wallis Engineering, February, 1997
- Town of Yacolt Wastewater Facilities Plan by Encon Corporation, May, 1976.

The Town of Yacolt General Sewer Plan by EES Consulting addressed sewer service needs in conjunction with the original Clark County Growth Management Plan [1996] and the 2002 Clark County Growth Management Plan update. This Plan addressed long-term action but was primarily used as an initial step, recommending the establishment of a regular inspection and maintenance program for septic systems within the Town. It recommended that this effort be undertaken by a public agency rather than the homeowner. It discussed possible options for treatment and collection. The 20-Year Capital plan included installation of inspection risers (2002-2003), Septic maintenance program (2004-2011) and construction of a sewer system using the existing septic tanks. A re-circulating sand filter system with a subsurface effluent disposal system was recommended. Discussion of the action items listed above can be found in the Capital Facility Plan (10) and Financing (11) Chapters.

## 4.1 Hydrogeological Studies

Hydrogeological studies were performed in the 1980s – 1990s; these studies looked at domestic water provision within the basin. The 1996 Yacolt Hydrogeologic Study by Hart Crowser discusses both transition to a centralized sewer system as well as ground water recharge impacts, primarily focused on the valley south of the town. This study identifies a split of groundwater flow (both to the north and the south) from approximately the north edge of Town. During the dry season, all groundwater flow transitions to the south. Flow is primarily to Cedar Creek to the north and Yacolt Creek to the west and south. While Cedar Creek is tied to the groundwater aquifer year round and may even recharge the aquifer in the dry season [Hart Crowser, 1996], only the south parts of Yacolt and Weaver Creek are connected year round. There has not been appreciable nitrate changes since testing began in 1984 within the public wells; however, there is a minor trend upwards in the nitrogen values in some shallower monitoring wells. The primary driver for future water quality is the Ground Water Quality Standards. The 1996 study recommends the use of a Septic Tank Effluent Pump (STEP) or Septic Tank Effluent Gravity (STEG) collection system. This study did recommend beneficial recharge for effluent discharge. Other studies include:

- Town of Yacolt Wellhead Protection Plan Update, PGG, May, 2003.
- Yacolt Hydrogeologic Study, Hart Crowser, January, 1996

- Yacolt Wellhead Protection Plan, CCN, 1993.
- Hydrogeological Study for Town of Yacolt Water System Improvements-Task 1 Report by Carr/Associated, Inc., May, 1990
- USGS Regional (Intergovernmental Resource Center of Clark County) Assessment, Turney, 1988.
- Supply Well Assessment, Sweet Edwards and Associates, 1983
- USGS Study by Mundorff, 1964

## 4.2 Recharge

According to the Hart Crowser 1996 study, recharge by the septic systems is a small part of the overall recharge in the basin.

## 4.3 Problems and Past Action

Septic system discharge can potentially contaminate groundwater—the drinking water supply for the town. Use of septic systems has limited development within Yacolt to lower densities (no lot sizes less than 10,000 sf) within the community. The following are summaries of studies describing ground and surface water resources in the Yacolt area and documenting the risk of contamination from septage plans recommending wastewater management measures, and actions taken to address the problem.

Carr & Associates conducted two hydrogeologic investigations in 1986 and 1990. These investigations addressed the prospect of maintaining an adequate and reliable supply of quality potable water for the community. The later study provides information on the characteristics of groundwater, particularly with accounts for seasonally low water levels that occasionally interrupt the withdrawal of water from the well field located at the town park, and ways to correct this condition. This report was prior to the development of the north production wells at the ball fields.

*Wellhead Protection Plan Town of Yacolt, July 1993*. The plan was prepared as an Environmental Protection Agency (EPA) demonstration project. A study conducted during the process of developing the plan found that Yacolt and the surrounding community withdraws water from a shallow, unconfined aquifer. In a few locations, the aquifer is only approximately 20 feet below the surface, which suggests that it is very vulnerable to contamination. Contaminants enter the aquifer very quickly via drywells and individual onsite septic systems. The study observed elevated nitrates in the water supply wells. Water tested from wells closest to the densely populated portion of the community measured the highest levels of nitrate (1.5 to 2.5 milligrams per liter [mg/L]), while those farther from population concentrations exhibited lower levels of nitrate (0.1 to 0.7 mg/L). The pattern of nitrate contamination detected at the time suggested that the source of contamination was from septic systems.

*East Fork Lewis River Water Quality Study, Clark County Public Works, August 1995.* Water quality problems are documented in a series of studies that were completed by Clark County. The studies culminated in the East Fork Lewis River Watershed Action Plan that recommended

actions to address the water quality problems in the basin. The plan recommends an effective onsite wastewater system inspection and maintenance program for Yacolt, among other areas.

*Yacolt Hydrogeologic Study, Hart Crowser, January 1996*. The study evaluated hydrogeologic conditions and existing groundwater quality in the aquifer that supplies Yacolt with drinking water. It found elevated levels of nitrate in water sampled from supply and monitoring wells. The study determined a background or natural nitrate value of 0.5 mg/L. Samples from a monitoring well located in the southern portion of the community (a location down-gradient given the flow of groundwater) ranged in nitrate values between 2.6 and 3.1 mg/L. Applying a statistical analysis to the samples taken from the monitoring wells yielded an extreme nitrate value of 3.64 mg/L as being possible. The study concluded that the town should be served by a public sewer system with a centralized wastewater treatment facility to protect its drinking water supply.

*Yacolt Sewer Feasibility Study, Wallis Engineering, 1997*. The study evaluated alternative wastewater management programs for the community. The findings indicated that a public sewer system was not necessary in Yacolt at that time. A community-wide onsite septic system inspection and maintenance program was recommended.

*Preliminary Alternative Feasibility Study for the Yacolt Wastewater Management Committee, December 1999*. The study evaluated alternatives to onsite wastewater disposal and concluded that the Town needs to work toward establishing a public sewer system. The committee recommended that the Town advance a plan for a public sewer system that involves septic tank effluent pumping and gravity wastewater collection. The specific wastewater treatment and disposal methods were left to further analysis.

*Yacolt Designated as an Area of Special Concern.* The Southwest Washington Health District (now Clark County Public Health) adopted Resolution 93-42 designating Yacolt an “area of special concern”. This designation was made recognizing the potential of failing septic systems contaminating the vulnerable aquifer in the area—the drinking water supply. Regulation 92-01 (authorized under WAC 246-272) requires owners of onsite systems in an area of special concern to inspect and maintain their systems in accordance with a program administered by the Health Department.

*Town of Yacolt General Sewer Plan, EES Consulting, 2002,* is the most recent wastewater management planning effort. Yacolt adopted the plan on 20 May 2002. The sewer plan is the first step for integrating GMA requirements with State sewer planning requirements under WAC 173-240. The plan set forth a wastewater management program for the town. This plan was not submitted to Ecology for approval.

### 4.3.1 Current Practices

Clark Public Utilities received financial assistance under the Washington State Public Works Trust Fund program to survey onsite wastewater disposal systems in Yacolt. As a result, Clark Public Utilities received financial assistance under the Washington State Ecology Water Quality State Revolving Fund (SRF) program to acquire and install inspection port risers on approximately 268 onsite wastewater disposal systems in Yacolt. These inspection ports will facilitate the efficiency of the new onsite system inspection and maintenance program. The inspection ports were installed on participating tanks by December 2004.

Yacolt initially authorized Clark Public Utilities to administer the onsite system inspection and maintenance program but ultimately took over this responsibility in 2008. The new “Nutri-clear” installations are inspected by a private firm through the warrantee period and the contract inspector notifies Clark County Public Health (CCPH) of any onsite system needing maintenance, repair or pumping. CCPH issues a notice of remedial actions required to correct problems. All agencies involved in the program encourage and foster swift action to correct any deficiencies.

Currently, Yacolt performs onsite septic system inspections for all systems that participated in the 2004 inspection/access program. Yacolt will move forward with adoption of an Ordinance to require that all systems within the UGA are in conformance with inspection, operation and, maintenance program.

The State of Washington, Department of Ecology is currently reviewing water quality on the East Fork of the Lewis River related to Total Maximum Daily Loading on the river. There are areas of concern related to temperature and fecal coliform downstream of the Yacolt valley as well as in tributary creeks (Yacolt and Big Tree) to the East Fork.

CPU also monitors nitrate levels at monitoring wells (See Appendix A). They show some variance with a minor trend upward.

### 4.3.2 Action Plan—Wastewater Management Program

Yacolt needs to be served by a public sewer system but the town is not capable of quickly assembling the financial resources necessary to cover the cost of designing, constructing and operating the system. Development of the sewer system will take time. Meanwhile, the Town needs to ensure that individual septic systems function properly. This General Sewer Plan includes a program that provides a step-by-step approach to managing the community’s wastewater, enabling a transition from onsite septic systems to a public sewer system. A summary of the program follows.

#### 4.3.2.1 Previous Items

- *Year 2002-2004.* Conduct a study of the community’s onsite septic systems to define the scope of the onsite system inspection and maintenance program. Install inspection port risers on those septic tanks that do not have them. Participation is at approximately 90 percent. (This project is complete, but ongoing efforts are in place to bring all remaining residences into compliance).

- *Year 2004-2007.* Establish a locally designed and mandated community-wide septic system inspection and maintenance program, to be implemented during planning, design, assembling of funds, securing of permits and construction of the public sewer system. (in place based on state/county mandated changes).

#### 4.3.2.2 Current Items

- *Year 2008-2010.* Complete and obtain approval of General Sewer Plan.

- *Year 2008-2012*. Participate in the Ecology TMDL modeling of the East Fork of the Lewis River for obtaining load allocations for a proposed discharge.

- *Year 2008-2011*. Create a Citizens Advisory Committee to discuss and generate a Town vision for both sewer service and growth.

- *Year 2010-2011.* Develop the Yacolt Facility Plan for final planning for sanitary sewer service collection and treatment.

- *Year 2012-2020.* Design a sewer collection system and treatment facility for Yacolt.

- *Year 2013-2027.* Build a sanitary sewer collection and treatment system and complete construction within approximately a ten year period. It is anticipated that the construction will be over a two year period; however, until funding is secured, this construction period could occur anytime within the ten year period described. The system could utilize existing onsite septic tanks depending on the collection system technology selected. Wastewater released will be pumped to a central treatment facility and an effluent disposal system. The plan calls for the Town to take the following actions to finance the program: 1) establish a sewer utility fee, 2) seek outside funding for designing, permitting and constructing the sewer system, and 3) establish a system development charge for new homes to pay their share of sewer capital costs.

In the future, grants and loans will be sought to acquire land for the wastewater treatment plant, and for the design and construction of the system. It is likely that the system will be constructed in phases (collection vs. treatment and discharge). Wastewater management administrative and facility projects are identified in the capital facilities program.

Once the public sewer system is operating, Yacolt will update its comprehensive plan. The Town will consider higher development densities than those identified in the current plan. Expansion of the urban growth area will be considered as well.

# Section 5: Population, Flow and Load Projections

## 5.1 Population

In the near term, Yacolt is anticipated to continue to grow at a much slower rate than the projected 2 percent (OFM – 1.8-2.2%) average rate for Clark County. However, for simplicity in providing projections and to maintain consistency with the Clark County Growth Management Plan (2007), a two percent annual growth value is used as the basis of planning. Population values for the period between 2000 and 2008 were provided by the Washington State Office of Financial Management (OFM). 2008 values were based on projections provided by OFM in October, 2008. Population increases after 2008 were calculated at two percent per year for the residential category. Population per household is 3.31 persons as defined in the 2000 census for Yacolt. The 2008 residential equivalents were taken from a physical count of 527 residences which include the 16 multiple dwelling units.

According to the Yacolt 2004 Comprehensive Plan update, there were 10 acres of commercial use in 2000; the 10 acres resulted in 12 businesses in 2000. It is assumed that full 'build out' of the commercial parcels will occur by 2029 with flow generated at a rate of 750 gal/acre/day resulting in 83 equivalent ERUs based on the flow generation assumptions in Section 1.2 below.

Light Industrial occupied only one acre in 2000 (According to Yacolt, Comprehensive Growth Management Plan, February 2004) with three uses. As with commercial uses, light industrial uses are assumed to generate 750 gal/acre/day of flow, with an associated number of equivalent ERUs based on the assumptions outlined in section 1.2 below..

Public uses include the school, city hall, and church. School population was the only one that was increased for the public uses. The school has 800 students (assuming 24 students per ERU); church = 1 ERU; City hall = 1 ERU; and the school population was assumed to increase at the same rate as that of residential population (2%).

## 5.2 Flow

Flows are projected based on factors from the Washington State Department of Ecology Criteria for Sewage Works Design Manual (2007) for estimating flows and loading. Average flow is anticipated to be lower then traditional gravity installations as it is anticipated that the system will be an alternate system resulting in less potential for infiltration and inflow. While the Ecology Design Manual shows a peaking factor in the range of 3.7 (based on the population of 1500), it is anticipated that with an alternate collection system, the I&I component will be less. Using normal values of 100 gpcpd with I&I and reducing this by half of the I&I (using 35 gpcpd of I&I results in an I&I reduction of 17 % per capita), we used a peaking factor of three for calculation purposes in this document. If STEP systems are used, we anticipate TSS and BOD numbers lower than the normal secondary values, but we have used averages from the Design Manual at this time. Flow values and loading were estimated based on Ecology's Design Manual (Orange Book). According to Orange Book, per capita maximum month flows are assumed to be 100 gpd, average dry weather flows are 80 gpd, wet weather average flows are 90 gpd, and annual

average TSS and BOD are 0.2 lb/day per capita.  All of these values will be analyzed during the Facility Plan process and selection of the proposed technology.

Initial design parameters for the Yacolt General Sewer Plan development shall be based on the 20 year design values (year 2029) of:

- MMF =  301,000 gallons/day
- Population equivalents = 3,013
- Connections = 910 ERUs
- Total Suspended Solids = 603 pounds/day
- Biochemical Oxygen Demand = 603 pounds/day
- Removal will calculate at 90% for BOD and TSS

Table 5-1 shows the projected population flow and loads over the next twenty years.

**Table 5-1: Projected 20-Year Population, Flow and Loads**

| Year | Population | ERUs | | | | | | Population Equivalent | Max Month Flows @ 100 gpcd (MGD) | Dry Average Flows @ 80 gpcd (MGD) | Wet Average Flows @ 90 gpcd (MGD) | TSS/BOD Average Annual @ 0.2 (lb/day) |
|---|---|---|---|---|---|---|---|---|---|---|---|---|
| | | New Res ERUs | Res ERU Total | Comm ERU Total | Light Industrial ERU | Public ERU | Total ERUs | | | | | |
| | A | B | C | D | E | F | G | H | I | J | K | L |
| 2000 | 1,055 | - | 344 | 12 | 3 | 35 | 394 | 1,304 | 0.130 | 0.104 | 0.117 | 260.7 |
| 2001 | 1,065 | 3 | 347 | 12 | 3 | 36 | 398 | 1,316 | 0.132 | 0.105 | 0.118 | 263.2 |
| 2002 | 1,105 | 12 | 359 | 12 | 3 | 37 | 410 | 1,358 | 0.136 | 0.109 | 0.122 | 271.7 |
| 2003 | 1,115 | 3 | 362 | 12 | 3 | 37 | 414 | 1,371 | 0.137 | 0.110 | 0.123 | 274.2 |
| 2004 | 1,135 | 6 | 368 | 12 | 3 | 38 | 421 | 1,393 | 0.139 | 0.111 | 0.125 | 278.7 |
| 2005 | 1,160 | 8 | 376 | 12 | 3 | 39 | 429 | 1,421 | 0.142 | 0.114 | 0.128 | 284.2 |
| 2006 | 1,220 | 18 | 394 | 12 | 3 | 40 | 448 | 1,483 | 0.148 | 0.119 | 0.134 | 296.7 |
| 2007 | 1,370 | 45 | 439 | 12 | 3 | 41 | 494 | 1,636 | 0.164 | 0.131 | 0.147 | 327.2 |
| 2008 | 1,470 | 30 | 527 | 12 | 3 | 41 | 583 | 1,929 | 0.193 | 0.154 | 0.174 | 385.9 |
| **2009** | **1,499** | **9** | **536** | **15** | **3** | **42** | **596** | **1,974** | **0.197** | **0.158** | **0.178** | **394.7** |
| 2010 | 1,529 | 9 | 545 | 19 | 3 | 43 | 610 | 2,019 | 0.202 | 0.161 | 0.182 | 403.7 |
| 2011 | 1,560 | 9 | 554 | 22 | 3 | 44 | 624 | 2,064 | 0.206 | 0.165 | 0.186 | 412.8 |
| 2012 | 1,591 | 9 | 564 | 26 | 4 | 45 | 638 | 2,110 | 0.211 | 0.169 | 0.190 | 422.1 |
| 2013 | 1,623 | 10 | 573 | 29 | 4 | 46 | 652 | 2,157 | 0.216 | 0.173 | 0.194 | 431.5 |
| **2014** | **1,655** | **10** | **583** | **32** | **4** | **47** | **666** | **2,205** | **0.220** | **0.176** | **0.198** | **441.0** |
| 2015 | 1,689 | 10 | 593 | 36 | 4 | 48 | 681 | 2,253 | 0.225 | 0.180 | 0.203 | 450.6 |
| 2016 | 1,722 | 10 | 603 | 39 | 5 | 49 | 696 | 2,302 | 0.230 | 0.184 | 0.207 | 460.4 |
| 2017 | 1,757 | 10 | 614 | 42 | 5 | 49 | 711 | 2,352 | 0.235 | 0.188 | 0.212 | 470.4 |
| 2018 | 1,792 | 11 | 624 | 46 | 5 | 50 | 726 | 2,403 | 0.240 | 0.192 | 0.216 | 480.5 |
| **2019** | **1,828** | **11** | **635** | **49** | **6** | **51** | **741** | **2,454** | **0.245** | **0.196** | **0.221** | **490.8** |
| 2020 | 1,864 | 11 | 646 | 53 | 6 | 53 | 757 | 2,506 | 0.251 | 0.200 | 0.226 | 501.2 |
| 2021 | 1,902 | 11 | 657 | 56 | 6 | 54 | 773 | 2,559 | 0.256 | 0.205 | 0.230 | 511.8 |
| 2022 | 1,940 | 11 | 669 | 59 | 6 | 55 | 789 | 2,612 | 0.261 | 0.209 | 0.235 | 522.5 |
| 2023 | 1,978 | 12 | 681 | 63 | 7 | 56 | 806 | 2,667 | 0.267 | 0.213 | 0.240 | 533.4 |
| **2024** | **2,018** | **12** | **693** | **66** | **7** | **57** | **822** | **2,722** | **0.272** | **0.218** | **0.245** | **544.5** |
| 2025 | 2,058 | 12 | 705 | 70 | 7 | 58 | 839 | 2,779 | 0.278 | 0.222 | 0.250 | 555.7 |
| 2026 | 2,100 | 12 | 717 | 73 | 7 | 59 | 857 | 2,836 | 0.284 | 0.227 | 0.255 | 567.2 |
| 2027 | 2,142 | 13 | 730 | 76 | 8 | 60 | 874 | 2,894 | 0.289 | 0.232 | 0.260 | 578.8 |
| 2028 | 2,184 | 13 | 743 | 80 | 8 | 62 | 892 | 2,953 | 0.295 | 0.236 | 0.266 | 590.5 |
| **2029** | **2,228** | **13** | **756** | **83** | **8** | **63** | **910** | **3,013** | **0.301** | **0.241** | **0.271** | **602.5** |

# Section 6: Regulatory Requirements

This section summarizes the regulatory requirements associated with discharge to water bodies in the Yacolt Valley area, reuse of treated effluent, and treatment and reuse of biosolids associated with the wastewater treatment process.

## 6.1 Washington Water Quality Criteria

Use designations for waterways in Washington are established in WAC Chapter 173-201A. Designated beneficial uses include aquatic life, recreational use, water supply, and miscellaneous uses. Water quality criteria established to protect these designated uses are provided in both narrative and numeric form. Per WAC 173-201A-600, "all surface waters of the state not named in Table 602 are to be protected for the designated uses of: Salmonid spawning, rearing and migration; primary contact recreation; domestic, industrial, and agricultural water supply; stock watering; wildlife habitat; harvesting; commerce and navigation; boating; and aesthetic values." Additional protections apply if the waters are within national parks or wilderness areas, or are tributaries to water designated as core summer salmonid habitat. Big Creek is identified in Table 602 as protected for Char spawning/rearing and Extraordinary Primary Contact Recreation. For all other streams near the Town, the critical use designation for purposes of effluent discharge is salmonid spawning, rearing, and migration.

As part of the State of Washington's Water Quality Assessment for 2004, the East Fork Lewis River was identified as being impaired based on high temperature and fecal coliform levels, and Cedar Creek was identified as being impaired based on fecal coliform levels. Two locations on Yacolt Creek show fecal coliform impairments. A TMDL for the East Fork Lewis River was initiated in 2005 to establish load allocations (LAs) and waste load allocations (WLAs) for thermal load and fecal coliform counts to bring the River into compliance with state water quality standards. Ecology has gathered data and is scheduled to begin modeling and analysis in 2009 with completion of the TMDL expected in 2010. No water quality improvement projects are currently underway for Cedar Creek.

## 6.2 Applicable Water Quality Standards

Ecology has delegated authority from EPA to enforce the federal Clean Water Act (CWA) protecting waters of the United States and to regulate the discharge of treated effluent from Wastewater Treatment Plants (WWTPs) through the National Pollutant Discharge Elimination System (NPDES) program. Ecology's authority is outlined in Chapter 90.48 of the RCW. Technical and water quality criteria for WWTP discharges to surface and ground waters are outlined in Chapter 173 of the WAC. The Code also includes an antidegradation clause requiring that discharges not further degrade existing water quality [WAC 173-201A-300], and acknowledges the State's authority to require utilities to apply all known, available, and reasonable treatment (AKART) to protect water quality. Surface water bodies in the vicinity of Yacolt qualify as Tier I under the antidegradation policy. Tier I is used to ensure existing and designated uses are maintained and protected and applies to all waters and all sources of pollution.

### 6.2.1 BOD/TSS

Potential future biochemical oxygen demand (BOD) and total suspended solids (TSS) limits are driven by various requirements and guidelines in the WAC. Section 173-221-040 of the WAC establishes technology-based standards for effluent BOD and TSS as 30 mg/L and 45 mg/L under average month and average weekly conditions.

### 6.2.2 Fecal Coliform

The surface water quality criteria for fecal coliform bacteria in streams protected for primary contact recreation is 100 colonies /100 ml (geometric mean), with not more than ten percent of all samples exceeding 200 colonies /100 ml. In streams protected for extraordinary primary contact recreation, the standard is 50 colonies per 100 ml (geometric mean), with not more than ten percent of all samples exceeding 100 colonies /100 ml [WAC 173-201A-200].

### 6.2.3 Turbidity

Turbidity in surface waters supporting char or salmonid spawning/rearing may not exceed five nephelometric units (NTU) over background when the background is 50 NTU or less, or a ten percent increase in turbidity when the background turbidity is more than 50 NTU.

### 6.2.4 Toxic Substances

Toxic substances are not permitted above background levels at concentrations that would cause acute or chronic toxicity to the most sensitive species dependent on the surface water, or at levels that would affect public health. Acute and chronic concentration levels for a wide variety of constituents are given in WAC 173-201A-240. The potential for wastewater effluent to cause an exceedence of these limits is determined through a Reasonable Potential Analysis. For wastewater effluent, the species most likely to be regulated under the toxic criteria requirements are ammonia-nitrogen and chlorine. If a reasonable potential is likely to occur, concentration of these constituents is regulated through the discharger's NPDES permit.

### 6.2.5 Temperature

Temperature standards are established to protect aquatic life in surface waters. The aquatic life criteria is measured by the seven-day average of the daily maximum temperatures (7-DADMax). The temperature standard for char spawning and rearing is 12 degrees Celsius (°C), and the temperature standards for salmonid spawning, rearing, and migration is 17.5 °C.

When the stream temperature exceeds the standard, cumulative human action cannot cause an increase in stream temperature of more than 0.3 °C.

## 6.3 Reclaimed Water

The State recognizes four classes of reclaimed water, which are distinguished by the level of post-secondary treatment provided. Characteristics of the four classes of recycled water are described in Table 6-1 below.  A new Draft Reclaimed Water Rule (173-219 WAC) is currently

under review, with final rule adoption scheduled for December 31, 2010. The new rule outlines administrative procedures and technical requirements for use of reclaimed water in Washington. Because reuse is not proposed for the Town of Yacolt, the new rule is not anticipated to impact the Town's planning for wastewater services.

**Table 6-1: Characteristics of the Four Classes of Recycled Water**[(a)]

| Class | Characteristics |
|---|---|
| **A** | Class A reclaimed water will, at all times, be oxidized, coagulated, filtered, and disinfected wastewater. State water reclamation and reuse standards call for Class A reclamation water to be filtered to a turbidity level which does not exceed an average operating turbidity of two nephelometric units (NTU), determined monthly, and which does not exceed five NTU at any time. Filtration can be achieved by passing oxidized wastewater through natural undisturbed soils or through filter media such as sand or anthracite.<br><br>Class A reclaimed water must be disinfected such that the median number of total coliform organisms in the wastewater after disinfection does not exceed 2.2 per 100 milliliters, as determined from the bacteriological results of the last seven days for which analyses have been completed, and such that the number of total coliform organisms does not exceed 23 per 100 milliliters in any sample.<br><br>Class A reclaimed water is currently the only reclaimed water class for which Ecology requires coagulation and filtration. Further, the disinfection requirements for Class A reclaimed water are more stringent than for Class C or D reclaimed water (the disinfection requirements for Class B reclaimed water are identical to those for Class A). Class A reclaimed water must be used where the potential for public exposure to reclaimed water is high. |
| **B** | Class B reclaimed water will, at all times, be oxidized and disinfected wastewater. The wastewater will be considered adequately disinfected if the median number of total coliform organisms in the wastewater after disinfection does not exceed 2.2 per 100 milliliters, as determined from the bacteriological results of the last seven days for which analyses have been completed, and the number of total coliform organisms does not exceed 23 per 100 milliliters in any sample. |
| **C** | Class C reclaimed water will, at all times, be oxidized and disinfected wastewater. The wastewater will be considered adequately disinfected if the median number of total coliform organisms in the wastewater after disinfection does not exceed 23 per 100 milliliters, as determined from the bacteriological results of the last seven days for which analyses have been completed, and the number of total coliform organisms does not exceed 240 per 100 milliliters in any sample. |
| **D** | Class D reclaimed water will, at all times, be oxidized and disinfected wastewater. The wastewater will be considered adequately disinfected if the median number of total coliform organisms in the wastewater after disinfection does not exceed 240 per 100 milliliters, as determined from the bacteriological results of the last seven days for which analyses have been completed. |

**Note:**
(a) Source: Washington State Department of Ecology, *Criteria for Sewage Works Design*, October 2006

## 6.4 Biosolids

Biosolids are the solids derived from primary, secondary, or advanced treatment of domestic wastewater that have been treated to significantly reduce pathogens and reduce volatile solids to the extent that they do not attract vectors. This term refers to domestic wastewater treatment facility solids that have undergone adequate treatment to permit their land application.

Most WWTPs in Washington beneficially use their biosolids through agricultural land application on pasture, hay, wheat, and a variety of other crops. A small, but increasing number of communities further treat their biosolids such as through composting, thermal drying, or high-temperature lime stabilization so that the end product can be sold or given away to the public.

### 6.4.1 Biosolids Regulations

Ecology implements regulatory oversight of biosolids beneficial use practices (e.g., land application) in Washington. Although Ecology does not have formal delegation authority to implement the federal biosolids regulations, EPA supports Ecology's regulatory oversight by providing funds, technical assistance and occasional compliance assistance. Furthermore, EPA does not currently conduct permitting activities for the beneficial use of biosolids in Washington. This includes all beneficial use activities such as land application, composting, lime stabilization, and air drying. EPA maintains sole authority for biosolids management activities involving municipal sewage sludge incineration and for activities on tribal lands.

Ecology implements their regulatory authority in accordance with Chapter 173-308 WAC, which establishes requirements regarding biosolids management, treatment, storage, recycling, and permitting requirements. Ecology implements regulatory requirements through a wastewater facility's statewide General Permit for Biosolids Management. The permitting process to obtain coverage under the General Permit also addresses requirements under the State Environmental Policy Act and federal biosolids public notification requirements. The permit contains a complete description of a facilities biosolids beneficial use process including: flows, treatment processes, quantity and quality, hauling procedures, spill response plans, land application site information, and sale or give-away program for Class A Exceptional Quality (EQ) biosolids. A Biosolids General Land Application Plan and a Site Specific Land Application Plan are not required for facilities that generate Class A EQ biosolids.

The state biosolids regulations define three measures for biosolids quality:

- Pathogen Reduction
- Vector Attraction Reduction
- Pollutants.

### 6.4.2 Pathogen Reduction Requirements

Pathogens are disease-causing organisms such as viruses, parasites, and certain types of bacteria. These organisms are significantly reduced during the biosolids treatment process so that they can be beneficially used. Pathogen reduction requirements define two classifications of biosolids – Class A and Class B. These classifications indicate the density (number per unit

mass) of pathogens in biosolids. Class A requirements necessitate almost the complete destruction of pathogens. Class B requirements call for significantly reducing the density of pathogens and land applying biosolids by implementing specific site management practices such as buffers from rivers and streams. A third classification of biosolids is Class A EQ. This refers to biosolids that have met the Class A pathogen reduction requirements and have met the lower concentrations standards for pollutants or “metals.”

To be classified as Class A, biosolids must be treated using one of EPA’s six pathogen reduction alternatives which include several treatment methods known as processes to further reduce pathogens (PFRPs), or an equivalent process. These processes include composting, heat drying, heat treatment, thermophilic aerobic digestion, beta ray irradiation, gamma ray irradiation, and pasteurization. In addition to using one of the prescribed pathogen reduction alternatives, Class A biosolids must not exceed maximum allowable fecal coliform density or salmonella bacteria density.

Class B biosolids must be treated using one of EPAs pathogen reduction alternatives, which include several treatment methods known as PSRPs, or an equivalent process. These processes include aerobic digestion, air drying, anaerobic digestion, and lime stabilization.

### 6.4.3 Vector Attraction Requirements

Vector attraction refers to the tendency of biosolids to attract rodents, insects, and other organisms that can spread disease. Biosolids must meet one of the following requirements for reducing vector attraction if they are to be applied to land without restrictions:

- Volatile solids in the biosolids must be reduced by a minimum of 38 percent.
- The specific oxygen uptake rate for biosolids treated by aerobic digestion must be less than or equal to 1.5 million gallons (mg) oxygen per hour per gram of total solids at a temperature of 20 °C.
- Aerobic processes shall treat the biosolids for a minimum of 14 days with an average temperature of at least 45 °C and a minimum temperature of 40 °C.
- Material containing no unstabilized biosolids must be dried to at least 75 percent solids.
- Material containing unstabilized biosolids must be dried to at least 90 percent solids.
- Lime or other alkali addition must raise the power of hydrogen (pH) of the biosolids to a minimum of 12 for two hours and maintain the pH at a minimum of 11.5 for an additional 22 hours without additional lime.

### 6.4.4 Site Management Practices

In addition to meeting pathogen reduction and vector attraction reduction requirements, Class B biosolids land application activities must implement certain site management practices. These practices include maintaining setback distances to drinking water wells and streams, controlling public access to the land application site, grazing or harvest restrictions based on the type of

crop and biosolids application method, agronomic application rate calculations, and providing for public notification of the land application activity.

The use of Class A EQ biosolids does not require any of the site management practices described above and are essentially free of regulatory restrictions once the pathogen reduction and vector attraction reduction standards have been met in the WWTP.

### 6.4.5 Pollutants

Wastewater facilities that generate and beneficially use biosolids (e.g., agricultural land application) must monitor for and meet concentration limits for nine pollutants. These pollutants, commonly referred to as "metals," include: arsenic, cadmium, copper, lead, mercury, molybdenum, nickel, selenium, and zinc. In addition to the nine pollutants, several other parameters must be monitored. The parameters include nitrogen, phosphorus, potassium, pH, total solids, and volatile solids.

Four limits have been set for the nine pollutants, as follows:

1. Ceiling Concentrations – All biosolids applied to the land must meet the ceiling concentrations for pollutants listed in Code of Federal Regulations (CFR) 40 CFR §503.13, Table 1. The ceiling concentrations are the maximum concentration limits for the nine regulated pollutants in biosolids. If a limit for any one of the pollutants is exceeded, the biosolids cannot be applied to the land until such a time that the ceiling concentration limits are no longer exceeded.

2. Pollutant Concentrations – Biosolids that are to be sold or given away; or applied to the land and are not to be required to calculate cumulative pollutant loading (see below) must meet the concentrations listed in 40 CFR §503.13, Table 3. If the pollutant concentrations for the nine regulated metals in biosolids are exceeded, then the facility must track the cumulative loading of the metals until such a time that the pollutant concentration limits fall below Table 3 levels.

3. Cumulative Pollutant Loading Rates – Biosolids that exceed the pollutant concentrations listed in 40 CFR §503.13, Table 3 but are below 40 CFR §503.13, Table 1, must be tracked and must not exceed the cumulative pollutant loading rates per hectare in accordance with 40 CFR §503.13, Table 2.

4. Annual Pollutant Loading Rates – Biosolids that meet Class A requirements with respect to pathogen and vector attraction reduction requirements, that are bagged, but do not meet the pollutant concentrations in Table 3 must not exceed the annual pollutant loading rates prescribed in 40 CFR §503.13, Table 4.

### 6.4.6 Coverage under Ecology's General Permit for Biosolids Management and Residual Solids Management Plan

Wastewater facilities that are subject to Ecology's General Permit apply for coverage under the existing general permit. This is done in two stages. The first stage is accomplished by submitting a Notice of Intent. This form notifies Ecology that a facility recognizes its obligations

under the general permit. The second stage of the permit process is the submittal of a full permit application. This submittal addresses all aspects of biosolids management proposed by a facility. This includes review under the State Environmental Policy Act, public notice, and potentially public hearings or meetings.

Submittal of all permit application documents, meeting public notice requirements, and operating in compliance with the state biosolids rule (Chapter 173-308 WAC) and the General Permit for Biosolids Management results in a facility having “provisional approval”. Provisional approval refers to the fact that there is an additional review process specific to each facility. As a condition of final approval of coverage, Ecology may impose additional or more stringent requirements beyond those of the basic general permit if they are necessary to protect public health or the environment. Permit applications must be submitted at least 180 days prior to beginning biosolids management activities.

# Section 7: Collection System

## 7.1 Introduction

Currently, the community of Yacolt is served by individual onsite septic systems on large urban zoned lots. Recent (post 2004) onsite septic tanks have been installed with the anticipation that a STEP collection system may be constructed in the future. Tanks have been inspected, inspection ports have been installed and scheduled inspection and maintenance requirements have been implemented.

Because there is no sanitary sewer system currently in Yacolt, the review and selection of collection, treatment and discharge technologies and locations is a highly interactive process. The location of the treatment plant is somewhat subject to the point of discharge as well as the resulting collection system technology. The collection system type will also affect the type of treatment plant that can be used. Therefore, selection of the appropriate collections system must be done in conjunction with the treatment and discharge alternatives.

## 7.2 Collection System Alternatives

There are multiple options for a collection system. The following gravity and pressure systems have been investigated (see Figure 4) to determine a recommended alternate based on initial cost, operational flexibility and long term operational costs.

1. Gravity sewer
2. Septic Tank Effluent Pump (STEP)
3. Septic Tank Effluent Gravity (STEG) Systems
4. Vacuum systems
5. Grinder systems

### 7.2.1 Local (Washington) Existing Users

The following 'local' providers were contacted regarding their experience with the following systems.

Gravity - Clark Regional Wastewater, City of Battle Ground, City of Vancouver

STEP - Clark Regional Wastewater; Rick Nelson, Maintenance Manager, 360-993-8831
City of Camas; Monte Brachman, Public Works Director, 360-817-1560

STEG - City of Camas; Monte Brachman, Public Works Director, 360-817-1560

Vacuum - City of Ocean Shores; Marshall Read – Collection Systems, 360-289-2754

Grinder - Clark Regional Wastewater; Rick Nelson, Maintenance Manager, 360-993-8831
City of Ocean Shores; Marshall Read – Collection Systems, 360-289-2754

## 7.3 Gravity Sewer

A standard gravity collection system consists of the following main elements:

- A gravity service line/lateral from the building to the collection system
- Gravity collection pipes
- Manholes in the collection system at approximately 400-feet intervals
- Trunk or interceptor lines if necessary

All of the wastewater is transported to the treatment plant.

Preliminary layouts of the system indicate the following general quantities:

- 37,150-feet of 6-inch to 8-inch gravity main
- 25,000-feet of 4-inch service line
- 120 manholes
- 4 cleanouts
- 540 abandoned septic tanks

### 7.3.1 Potential for a Gravity System

A gravity sewer is the normally preferred installation for long-term cost, operation, and maintenance. It is simple in its operation, and designed to be relatively low maintenance. Based on the topography of Yacolt, with the ground elevation generally dropping from north to south and east to west, a gravity installation could mirror the natural topography with the optimal installation collecting and bringing all flow to the southwest corner of the urban developed area. It appears that this could be constructed without any intermediate pump stations which would result in controlling excavation depths and the resulting higher costs.

Should the wastewater treatment plant be located elsewhere, a main pump station may be required.

The general slope across the current Town limits from north to south is approximately one percent (40-feet in elevation over 3700-feet). Install an 8-inch collection pipe, which produces an average velocity of over 3-feet per second. Therefore, cleaning velocities should be maintained.

Line installation depths would be at 6-feet to 8-feet in depth to provide service to most homes on slabs or with crawl spaces. A review of potential basements resulting in deeper installations has not been accomplished at this time and will be performed during the design process if this technology is selected.

### 7.3.2 Potential Impacts

A large impact of changing from onsite systems to a standard gravity system has to do with service lines/laterals. Typically, onsite systems are located in backyards, and gravity collection systems are located in the street right-of-way for maintenance purposes. Therefore, there is a significant amount of service line that is required; often there is as much service line footage as there is main line. There are also instances where the house plumbing needs to be modified.

There would be a higher potential of impact in areas of bedrock or large boulders within the valley and the inherent costs involved with gravity installations over more shallow alternative collection systems make this alternative less attractive. Public Works staff has stated that there are areas of underground deposits (boulders and bedrock) that can be encountered anywhere within the valley, but concerns are primarily in the northeast area of the valley.

There is also a higher potential of encountering groundwater (perched groundwater areas) as depth of installation increases.

These potentials would need to be anticipated in bidding, and the anticipated cost impacts of both of these possibilities would be difficult to ascertain prior to construction.

Gravity sewer systems do have more potential for infiltration and inflow (I&I). While materials (pipe) and construction methods have improved, there are still more connections (manholes and cleanouts) and a greater possibility of infiltration, roots or other connections (illegal-storm) to a gravity system.

It is anticipated that a gravity system would be the most costly as the depth of the house services and the relatively flat terrain would drive the depth of the system. In addition, there is a desire to limit public right of way improvements and the Town's desire to restrict road cuts and install lines outside of pavement could also result in cost impacts for a gravity installation.

## 7.4 Septic Tank Effluent Pump (STEP)

A STEP system consists of the following main elements:

- Gravity service lateral from the building to the septic tank
- A septic tank with a pump system
- A pressure service line from the septic tank to the collection system
- A pressure collection system

Only the supernatant/effluent is transported to the treatment plant. The septic tank is actually the primary solids handling part of the treatment with an estimated 20 percent of solids received at the downstream treatment facility.

Preliminary layouts of the system indicate the following quantities:

- 37,150-feet of 2-inch to 6-inch pressure main
- 5,000-feet of 4-inch service line
- 20,000-feet of 1-¼-inch service line
- 340 abandoned septic tanks
- 340 new septic tanks with pumps
- 200 retrofit septic tanks with pumps

### 7.4.1 Potential for a STEP System

STEP systems are used in areas that have conditions that would make gravity service difficult or expensive. Examples of the conditions that other municipalities have experienced that have caused them to select a STEP system include bedrock at shallow depths, high groundwater, limited funding, insufficient slope for a gravity system and high variability in topography.

In Yacolt, some of the onsite systems have been approved and new systems have been installed with the idea that a STEP system would later be constructed. Therefore, some of the septic tanks are suitable as STEP tanks and could be re-used.

STEP systems use standard sized septic tanks (1250 – 1500 gallons for a normal household) to provide basic solids digestion and reduction, storing the bulk of the solids in the septic tanks with pump off and treatment of the resultant effluent. Flows are transmitted in small diameter plastic lines installed normally at three feet deep. There are limited appurtenances along a STEP collection line reducing possibilities of overflow, odor release, and costs.

Depending upon the elevation change in a community, main pump stations may be required. However, with only a 40-foot elevation change across the community and consistent topography slope, intermediate pump stations would not be required. Depending upon where the wastewater treatment plant will be located, a main pump station may be required.

### 7.4.2 Potential Impacts

Ideally, it would be beneficial for a STEP system to have the discharge point uphill as the system needs to maintain fully pressured lines to operate properly.

The supernatant/effluent is septic, so there will be some odor potential where it is open to atmosphere such as intermediate pump stations or the treatment plant. However, with the limited size of the system and service area formulation and release of gases should be minimized.

The septic tank is essentially part of the treatment system. Specifically, it is the solids treatment unit, and there will need to be a program put in place to periodically inspect and pump the tanks.

In a STEP system, every tank is a pump station. The City would need to have a regular maintenance schedule for checking the pumps and controls. It would be beneficial to have extra pumps and controls on hand as replacement parts. Normally, two percent of the number of installations is a reasonable number of replacement parts for maintenance inventory.

The private property work could potentially be higher with STEP systems. While the use of existing septic tanks is not normally recommended for a new STEP system, by having clear criteria for acceptability of these tanks, the Town could allow inclusion of some of Yacolts tanks into a sanitary sewer system. Pumping and inspection of existing tanks could allow for verification of the condition and usability of existing tanks. Existing tanks often have I&I problems so this inspection is critical so that I&I is controlled. By including existing tanks, the project costs should be reduced. Many of the existing tanks in Yacolt have already been ‘prepared’ for potential use as STEP tanks including requiring more stringent criteria for new

tank installations and the installation of access ports on existing tanks for ongoing maintenance and inspection.

Subsequent retrofitting of the remaining existing tanks that have not currently had the access ports installed would also help control overall costs of the project.

Another option if a STEP system is selected, could be to simply install smaller pump chambers outside of the standard septic tanks which would reduce the site impacts, costs and keep the process 'cleaner'. STEP systems normally have a full day (200-300 gallons) of capacity in case of power outages. This helps to alleviate the concern for impacts to individual households and the need for backup power for each unit.

A large impact of changing from onsite systems to a community collection system has to do with service lines. Typically, onsite systems are located in backyards, and collection systems are located in the street right-of-way for maintenance purposes. Therefore, there is a significant amount of service line that is required; often there is as much service line footage as there is main line. There are also instances where the house plumbing needs to be modified.

Loss of power at a service means that the STEP system will not operate. This is generally not a huge issue as a loss of power often means less use of facilities such as a washer, dishwasher or showers. Also, with the inherent capacity in the tanks, this is normally not a concern.

The construction cost of the STEP onsite system is normally less than a standard gravity system as a portion of the service line is pressure pipe. It is smaller, does not need to be laid to grade and is shallower.

Another impact of a STEP system is that there is less organic material that is transported to the treatment plant. This allows for additional types of treatment to be considered, and the design of standard treatment technologies will need to be adjusted.

## 7.5 Septic Tank Effluent Gravity (STEG) Systems

A STEG system consists of the following main elements:

- Gravity service from the building to the septic tank
- A septic tank
- A gravity service line from the septic tank to the collection system
- A small diameter gravity collection system

Only the supernatant/effluent is transported to the treatment plant. The septic tank is actually the solids handling part of the treatment. The collection system can be small diameter as it is not carrying bulk solids.

Preliminary layouts of the system indicate the following quantities:

- 37,150-feet of 3-inch to 8-inch gravity main
- 20,000 feet of service line
- 4,000 feet of 4-inch service line

- 120 manholes
- 4 cleanouts
- 340 abandoned septic tanks
- 340 new septic tanks
- 200 retrofit septic tanks

### 7.5.1 Potential for a STEG System

STEG systems are used in areas that have specific impacts that could restrict traditional gravity service or are difficult or expensive to serve with traditional gravity service. Examples of the potential reasons that other municipalities have justified the use of STEG systems include bedrock at shallow depths, high groundwater, limited available funding, limited availability of solids treatment and high (steep) variability in topography.

As discussed under the gravity sewer alternative, there appears to be sufficient slope through the community to allow for small diameter gravity systems without an intermediate pump station if it drains to the southwest.

Should the wastewater treatment plant be located elsewhere, a main pump station may be required.

The general slope across the current Town limits from north to south is approximately one percent (40-feet in elevation over 3700-feet). Using a 4-inch pipe, this produces an average velocity of 2-feet per second. Cleaning velocities should be maintained. Because we are not transmitting the majority of the settleable solids with STEG systems (similar to STEPs at approximately 20% solids), the need to maintain normal gravity velocities (of >2 foot/second) is not necessary.

Line installation depths would be at 6-feet to 8-feet in depth to provide service to most homes on slabs or with crawl spaces. A review of potential basements resulting in deeper installations has not been accomplished at this time.

STEG systems use standard sized septic tanks (1250 – 1500 gallons for a normal household) to provide basic solids digestion, reduction and storage capabilities for the system with gravity discharge of the resultant effluent thus reducing the need to pump the effluent.

While the use of existing septic tanks is not normally recommended for a new STEG system, by having clear criteria for acceptability of these tanks, the Town could allow inclusion of these tanks into a sanitary sewer system. Pumping and inspection of existing tanks could allow for verification of the condition and usability of existing tanks. By including existing tanks the project costs should be reduced. Many of the existing tanks in Yacolt have already been ‘prepared’ for potential use as STEG tanks including requiring of more stringent criteria for new tank installations and the installation of access ports on existing tanks for ongoing maintenance and inspection.

### 7.5.2 Potential Impacts of a STEG System

The supernatant is septic, so there will be some odor issues where it is open to atmosphere such as intermediate pump stations, manholes or the treatment plant. STEG systems will produce similar potential odor and corrosion issues as STEP systems

The septic tank is essentially part of the treatment system. Specifically, it is the solids treatment, and there will need to be a program put in place to periodically inspect and pump the tanks.

A large impact of changing from onsite systems to a community collection system has to do with service lines. Typically, onsite systems are located in backyards, and gravity collection systems are located in the street right-of-way for maintenance purposes. Therefore, there is a significant amount of service line that is required; often there is as much service line footage as there is main line. There are also instances where the house plumbing needs to be modified.

Another impact of a STEG system is that there is less organic material that is transported to the treatment plant. This allows for additional types of treatment to be considered, and the design of standard treatment technologies need to be adjusted; however, with the limited size of the system and service area this should be minimized.

## 7.6 Vacuum Systems

A vacuum system consists of the following main elements:

- Gravity service from the building to the valve pit
- A vacuum valve pit serving 1-4 homes
- A vacuum service line from the valve pit to the collection system
- A vacuum collection system
- A vacuum/pump station

All of the wastewater is transported to the treatment plant.

Preliminary layouts of the system indicate the following quantities:

- 37,150-feet of 4-inch to 8-inch vacuum main
- 10,000-feet of 4-inch service line
- 20,000-feet of 2-inch vacuum service line
- 250 vacuum valve pits
- 1-4 vacuum/pressure stations
- 540 abandoned septic tanks

### 7.6.1 Potential for a Vacuum System

Vacuum systems have been developed and used primarily in flat areas or areas of high groundwater or bedrock. They are recognized for their reasonable cost and simplicity of operations and maintenance.

For approximately every 23-feet in elevation gain, there will need to be a vacuum/pump station. The vacuum portion of the station pulls the wastewater from the valve pits at the services to the station. The pressure portion of the station pumps the wastewater to the treatment plant. A minimum of one - four vacuum/pressure stations would be required in Yacolt to cover the elevation gain and surface area. Additional stations may be required due to the size of the system, build out into the urban holding area, and layout issues.

Vacuum systems rely on multiple drops for each line (run) as well as intermediate connections of services along the runs to function effectively. There are limitations relative to the amount of lift available in each run as well as within the entire system. The systems are normally restricted to five lifts or drops in a run of line and approximately 1500-feet of length. Consequently, the lifts/drops also control the depth of the installation.

The valve pits that serve the residences are normally small (25-30 gallons), with optimal operation; a result of approximately ten gallons of sewage volume discharged for each vacuum cycle. Higher volumes (of discharge) result in loss of inertia and resulting reduction of propulsion and ineffectiveness of the system.

### 7.6.2 Potential Impacts of a Vacuum System

While there may be some concern for the impacts of a power outage, backup power would only be necessary at the vacuum/pump station(s).

When there is a leak in the vacuum collection system, it should be fixed immediately as the entire section of pipe could become inoperable. The leaks are fairly easy to find and repair.

A large impact of changing from onsite systems to a community collection system has to do with service lines. Typically, onsite systems are located in backyards, and collection systems are located in the street right-of-way for maintenance purposes. Therefore, there is a significant amount of service line that is required; often there is as much service line footage as there is main line. There are also instances where the house plumbing needs to be modified. However, with a vacuum system and use of ‘shared’ vaults (one vault for two units), this could reduce footages by half of the quantity.. It could increase access issues to the public portion of the system. With vacuum systems, it is anticipated that greater service lateral length will be installed if vaults are shared with multiple users.

## 7.7 Grinder Systems

A grinder system consists of the following main elements:

- Gravity service from the building to the grinder vault
- A tank with a grinder pump at each service
- A pressure service line from the tank to the collection system
- A pressure collection system

All of the wastewater is transported to the treatment plant.

Preliminary layouts of the system indicate the following quantities:

- 37,150-feet of 3-inch to 6-inch pressure main
- 5,000-feet of 4-inch service line
- 20,000-feet of 2-inch pressure service line
- 540 abandoned septic tanks

### 7.7.1 Potential for a Grinder System

Individual home grinder systems have been used in similar service installations as Yacolt. These systems have been installed similar to STEP/STEG when the same issues are prevalent (high water, bedrock) or where traditional gravity service cannot be installed without the need for a pump station. In most circumstances, gravity systems (existing gravity lines or pump stations) are located nearby.

If the progressive gravity grinder pumps are used, they can pump up to 120-feet of head. They have almost vertical pump curves which means that they pump the same volume regardless of how many pumps are operating at a time.

The mains in a grinder system are pressure so they can be shallow, typically 3-feet deep.

To use grinder systems within Yacolt, it would be necessary to either retrofit all tanks by pumping the tanks and adding a sloped bottom (normally by pouring concrete) in order to concentrate the solids in the vicinity of the pump for adequate removal or install new pump chambers at each lot. Many of these type of community installations use smaller vaults (25-60 gallons) for grinder systems.

Installing new pump chambers is the preferred method as some of the grinder pumps come as a packaged system that includes the tank, pump and controls. In addition, this will reduce I&I potential from existing septic tanks.

### 7.7.2 Potential Impacts of Grinder Systems

In a grinder pump system, every tank is a pump station. The City would need to have a regular maintenance schedule for checking the pumps and controls. It would be beneficial to have extra pumps and controls on hand as replacement parts. Normally two percent of the number of installations is a reasonable inventory amount for maintenance.

Loss of power at a service means that the grinder system will not operate. This is generally not a huge issue as a loss of power often means less use of facilities such as a washer, dishwasher or showers. However, with smaller vault sizes, this could be a concern.

A large impact of changing from onsite systems to a community collection system has to do with service lines. Typically, onsite systems are located in backyards, and collection systems are located in the street right-of-way for maintenance purposes. Therefore, there is a significant amount of service line that is required; often there is as much service line footage as there is main line. There are also instances where the house plumbing needs to be modified.

There are grinder pumps other than the progressive cavity pumps that are less expensive; however, they have more operational issues and are not recommended.

## 7.8 Alternative Comparison

The alternative collection systems have been compared with regard to capital cost, present worth cost (capital plus Operations and Maintenance [O&M] over 20 years), and other aspects of the system. A recommendation on the type of system will be made in conjunction with the treatment and disposal methods.

Table 7-1 provides a summary of the basic system components, and Table 7-2 provides an overview of impacts.

**Table 7-1: System Type**

| System | On-Site | Collection Lines | Transmission |
|---|---|---|---|
| Gravity | Laterals to homes | New gravity | New gravity or<br>Pump station & pressure main |
| STEP | Existing tanks with individual pumps or new tanks with pumps | New pressure | New pressure line or<br>Pump station & pressure main |
| STEG | Existing tanks or new tanks | New small diameter gravity | New gravity or<br>Pump station & pressure main |
| Vacuum | Valve pits | New vacuum | Multiple Vacuum stations & pressure main |
| Grinder | Existing tanks retrofitted or new tanks and pumps | New pressure | New pressure line<br>Pump station & pressure main |

**Table 7-2: System Overview**

| Type | Overview | Preference |
|---|---|---|
| Gravity | Traditional methodology.<br>Topography supports a gravity system.<br>Deepest and largest pipes<br>Highest potential for I/I.<br>Simplest to operate.<br>Carries both liquids and solids.<br>Abandon all septic tanks.<br>Higher potential to encounter bedrock and groundwater.<br>Highest cost estimate. | Highest cost and need for higher cost O&M equipment. |
| STEP | Pre-planned for this option with existing septics.<br>Could reuse some existing septic tanks.<br>Small diameter pipes and shallow depths.<br>Transports primarily liquid.<br>Provides treatment plant flexibility.<br>Each service is a pump station.<br>Septic tank pumping required for O&M.<br>Concerns related to necessary home power.<br>Could support phasing with both gravity and STEPs.<br>Possible power outage impacts | Preferable based on previous investment, but higher cost and potential concern related to use of existing septic tanks. |

| Type | Overview | Preference |
|---|---|---|
| STEG | Pre-planned for this option with existing septics.<br>Could reuse some existing septic tanks.<br>Small diameter pipes but deep depths.<br>Topography supports a gravity & STEG system.<br>Transports primarily liquid.<br>Provides treatment plant flexibility.<br>Septic tank pumping required for O&M.<br>Could support phasing with both gravity and STEGs.<br>Higher potential to encounter bedrock and groundwater. | Preferable based on previous investment, but higher cost and potential concern related to use of existing septic tanks. |
| Grinder | All existing tanks would be abandoned.<br>Each service is a pump station.<br>Carries both liquids and solids.<br>Concerns related to necessary home power.<br>Could support phasing with both gravity and grinders. | Would be feasible at a higher cost. Recommended to abandon existing septic tanks and put in package stations. |
| Vacuum | Topography supports a vacuum system.<br>All existing tanks would be abandoned.<br>Requires vacuum/pressure stations.<br>O&M seems simple.<br>Requires immediate response to loss of vacuum.<br>Backup power would only be needed at the main vacuum stations.<br>Could support phasing with both gravity and vacuum units in the future.<br>Low estimated costs. | Preferable based on cost, ease of O&M and ability to minimize number of vaults. |

The different collections systems are compared in Table 7-3 based upon cost, O&M, construction issues, and installation impacts to home owners.

**Table 7-3: Ratings-Impacts**

| System | Topo | Ground water | Bedrock | Construct Timing | Property Impact | O&M | Cost | Points |
|---|---|---|---|---|---|---|---|---|
| Gravity | + | - | - | - | + | + | - | 13 |
| STEP | 0 | 0 | + | + | - | - | + | 15 |
| STEG | + | - | - | + | - | 0 | + | 14 |
| Vacuum | - | 0 | + | 0 | + | 0 | + | 16 |
| Grinder | 0 | 0 | + | + | 0 | - | - | 14 |

**Notes:**
Ratings + = Positive (3); 0 = Neutral (2); - = Negative (1)

Ratings were based on how each item affects the type of installation, either positively or negatively. Positive ratings (+) are seen as a benefit to that type of installation; (-) is seen as a negative related to that type of installation. Costs are based on overall cost estimates.

The following three tables show the capital cost, operation and maintenance cost, and present worth cost for each system. A more detailed cost breakdown is included in Appendix B.

**Table 7-4: Collection System Capital Costs**

| Type | Costs Collection Lines | Lateral Costs | Total | Comments |
|---|---|---|---|---|
| Gravity | $8,267,000 | $2,346,000 | $10,613,000 | Gravity costs are highest based on deeper installations of mainlines. |
| STEP | $4,110,000 | $3,077,000 | $7,187,000 | STEP costs vary depending on using existing septic tanks; Use of existing tanks could increase potential for I&I. |
| STEG | $5,084,000 | $2,397,000 | $7,481,000 | STEG costs vary depending on using existing septic tanks; Use of existing tanks could increase potential for I&I. |
| Grinder | $4,805,000 | $3,722,000 | $8,527,000 | Grinder costs vary depending on using existing septic tanks; Use of existing tanks could increase potential for I&I. |
| Vacuum | $4,376,000 | $2,350,000 | $6,726,000 | Vacuum costs are the potential lowest based on ability to place multiple residences on a single vault. |

Operation and Maintenance (O&M) costs vary for the types of systems listed. We have taken costs from comparable organizations in order to attempt to make the O&M costs as accurate as possible as compared to using data from suppliers. These costs are simply for the collection system O&M, and are used for comparison purposes.

Please note that this does not include the full O&M cost for operating a wastewater utility which would include the treatment plant as well as items such as insurance, billing, accounting, audits, office labor, equipment (such as trucks, tools, safety equipment, computer, phones etc.), power, phone service, permitting, bonding, training, emergency repairs, consultant services, laboratory testing, reporting and similar items. These items would be the same for any of the alternatives.

**Table 7-5: Present Worth O&M Costs**

| Type | Annual O&M | 20-Year Capitalized* | Comments |
|---|---|---|---|
| Gravity | $25,000/yr + 37,000' @ $2.00 | $860,000 | Based on ½ FTE annually and contracting tving every 5 years and jetting every 5 years. Includes annual manhole inspection. |
| STEP - STEG | $25,000 (1-20) + $20,000 (year 6-20) | $568,000 | Based on ½ FTE annually and contracting pumping of tanks every 6-7 years (Camas) |
| Grinder | $25,000/yr + $5,000/pump | $350,000 | Based on ½ FTE and pump replacement every 10 years. Includes annual inspection |
| Vacuum | $25,000/yr + $3000/mo power | $829,000 | Based on ½ FTE performing pump station O&M which include vacuum pump, wastewater pumps and generator maintenance (Ocean Shores). |

**Notes:**
*Present worth costs using 4% interest annually.
FTE – Full time equivalent

**Table 7-6: Collection System Costs – Present Worth**

| Type | Capital Costs | Associated Project Costs | 20-Year O&M (PW) | Total (Present Worth) |
|---|---|---|---|---|
| Gravity | $10,613,000 | $2,653,250 | $860,000 | $14,126,250 |
| STEP-STEG | $7,187,000 | $1,796,750 | $568,000 | $9,551,750 |
| Grinder | $8,527,000 | $2,131,750 | $350,000 | $11,008,750 |
| Vacuum | $6,726,000 | $1,681,500 | $829,000 | $9,236,500 |

**Note:**
Associated Project Costs are included at 25% of capital costs. This includes legal, engineering and administration costs. , Land acquisition and construction management are included in the Capital Cost totals.

## 7.9 Recommendations

As indicated at the beginning of this section, the type of collection system will impact the treatment system. In particular, the solids treatment will be accomplished differently, and the influent wastewater characteristics will also vary and affect the treatment system. Therefore, the final selection must be made based upon the collection, treatment, and disposal alternatives considered together.

Two collection system recommendations will be carried forward for further analysis to account for the differences in treatment. One recommendation is made from the group of alternatives that includes standard gravity, grinder pump and vacuum systems. These three send both liquid and solids to the treatment plant. A second recommendation will be made from the group of alternatives that includes STEP and STEG. These two alternatives provide solids treatment in the septic tanks at each service.

- Vacuum Collection System: The vacuum system is our first recommendation based upon cost, relatively simple O&M, and impacts to the community. This will need to be combined with a treatment plant that includes solids treatment.

- STEP Collection System: The STEP collection system is our second recommendation based upon cost. It also offers the best opportunity to take advantage of existing efforts, to date. This will need to be combined with a treatment plant that does not include major solids treatment, and is designed to accommodate a weaker raw wastewater.

Depending on the eventual location of the treatment plant, there may be the need for additional transmission piping, and a booster pump station.

The Town's preferred technology selection for collection system development is to use a vacuum sewer system based on cost and non-cost considerations and site visits. The total present worth comparison results in statistically equal (+/- 5%) cost estimates for the vacuum system and STEP/STEG. Since the costs are close and there are benefits to either system it is recommended that both the STEP/STEG and vacuum alternatives be further considered during Facility Planning to further confirm costs, impacts on treatment process, etc. For costing

discussion, based on the Town's desire to use a vacuum system, the costs for budgeting purposes will only be the vacuum costs.

# Section 8: Treatment

As described in Chapter 5, the estimated maximum month wastewater flows in Yacolt are estimated to be 197,000 gallons per day (gpd) and the future 20 year maximum month flow is 0.29 mgd. Influent, based on flow from a vacuum collection system installation or a gravity collection system, is anticipated to be consistent with Washington Department of Ecology Orange Book guidelines: 240 mg/l biochemical oxygen demand (BOD), 240 mg/l total suspended solids (TSS), and 30 mg/l total nitrogen. On the basis of these wastewater characteristics, we have reviewed four treatment scenarios (one scenario is a pump and transmission installation) as listed below

## 8.1 Treatment Systems

The treatment systems selected for Yacolt were reviewed based on known technologies. The sanitary sewer system and service area size is relatively small; however, both the collection system and the discharge selection could play a major role in the treatment technology selection. The Yacolt treatment system initially selected in a past study (EES Consulting, 2002) is a Recirculating Media (sand) Filter (RMF) based on costs and simplicity of operation. However, based on further review, there appears to be other technologies that could provide a higher level of treatment required at a similar cost. The following technologies have been reviewed as alternatives for treatment:

1. Suspended Growth Treatment System
    a. Conventional Activated Sludge (CAS)
    b. Sequencing Batch Reactor (SBR)
    c. Oxidation Ditch
    d. Membrane Bioreactor (MBR)
    e. Packaged Biological Nutrient Removal Systems (Aeromod)
2. Fixed Film Treatment System
    a. Recirculating Media Filters (RMF)
    b. Orenco Systems: Advantex
3. Lagoon Systems
    a. Biolac
4. Pump station(s) and pressure main that transport wastewater to the closest treatment facility (City of Battle Ground).

The following sections briefly describe each technology and list the basis of assumptions used in estimation of costs. A comprehensive description of these technologies (CAS, MBR, Aeromod, RMF, Advantex, and Biolac) is detailed in Appendix B under Technical Memorandum No. 02, Town of Yacolt, General Sewer Plan – Treatment Technologies.

Solids handling is anticipated to be through the use of facultative sludge lagoon. This will be applied to all of the listed technologies as the method for addressing sludge handling. Based on the distance and location, a design with storage volume for approximately 10 years of sludge production will be added to the treatment costs. A sizing value will be assigned to the solids lagoon for solids handling. The cost of the facultative sludge lagoon is included in the estimate of $1.5 million which will include the lagoon, site work, lab/maintenance building,

disinfection, storm work and paving. These costs are further discussed at the end of the chapter.

### 8.1.1 Suspended Growth Treatment System

#### 8.1.1.1 Conventional Activated Sludge (CAS)

Conventional Activated Sludge (CAS) treatment is the most common type of centralized domestic wastewater treatment system employed by communities of all sizes. CAS is an aerobic treatment process that uses a suspended microorganism biomass to convert biodegradable organic compounds and nutrients in wastewater into easily removable byproducts. Wastewater typically enters the plant through a screen to remove large solids and floatable items for preliminary treatment. Following screening, wastewater may flow to a primary clarifier for removal of settleable solids. The primary-clarified wastewater (if primary clarifiers are in place) then flows to an aeration basin, where air is introduced to a mixture of wastewater and microorganisms (mixed liquor). The microorganisms in the mixed liquor absorb dissolved and suspended components of the wastewater and multiply, creating more mixed liquor solids. The mixed liquor is then conveyed to a secondary clarifier, where the microorganisms settle and can be removed as a concentrated sludge. A portion of the sludge is re-circulated to the aeration basin, and the remaining sludge is removed from the clarifier and pumped to a solids handling facility, where it is processed for disposal. For surface water discharge or reclaimed water use, the secondary effluent must be disinfected chemically or via ultraviolet light. Biosolids generated from the treatment process will require management, either through stabilization, dewatering and disposal or storage with contracted disposal. For small plants like Yacolt, the primary clarification step is often not required, with only preliminary treatment consisting of screening provided prior to secondary treatment. Additional discussion is available in Technical Memorandum No. 2 in Appendix B.

Based on a planning level cost estimate of $11/gallon for a CAS system, the capital cost of a CAS with capacity to treat 0.29 MGD is estimated at $ 3.2 million. An additional $1.5 million is included for Land acquisition, Site work, building (lab and maintenance), disinfection, and solids storage/treatment (sludge lagoon) and $0.6 million (including contractor markups) is included for tertiary filtration (DynaSand filter) for additional phosphorus removal (to reduce discharge levels to < 1 mg/L). Therefore, the total capital cost for a 0.29 MGD CAS system is estimated to be $5.3 million. The O&M cost for a 0.29 MGD CAS System is estimated to be $150,000 per year.

Small communities that employ CAS treatment technology frequently use package treatment plants. Packaged treatment plants significantly reduce the costs to construct individual components such as aeration basins and clarifiers because they use common-wall construction and can be shop fabricated. Hence, a typical conventional activated sludge installation can be less cost effective then packaged systems for smaller communities like Yacolt. Package treatment plants are offered utilizing a variety of activated sludge treatment technologies and are capable of achieving a high quality effluent.

#### 8.1.1.2 Sequencing Batch Reactors (SBR)

The sequencing batch reactor (SBR) is a fill-and-draw activated sludge system, where wastewater is added to a single “batch” reactor, and treated to remove undesirable components, and then discharged. Equalization, aeration, and clarification can all be achieved using a single batch reactor.

Influent wastewater generally passes through screens and grit removal prior to the SBR. Unlike a CAS, primary clarifiers typically are not required for municipal wastewater applications prior to an SBR (for BOD/TSS < 400 – 500 mg/L). Therefore, following screening, wastewater directly enters a partially filled batch reactor, containing biomass, which is acclimated to the wastewater constituents during preceding cycles. Once the reactor is full, it behaves like a conventional activated sludge system, but without a continuous influent or effluent flow. The aeration and mixing is discontinued after the biological reactions are complete, the biomass settles, and the treated supernatant is removed. Excess biomass is wasted at any time during the cycle. After the SBR, this batch of wastewater may flow to an equalization basin. An equalization basin may be required if the treated effluent requires filtration. Optimally sizing filters accepting “batch” flows may not be feasible without an equalization basin upstream. The treated wastewater will require disinfection, chemically or via ultraviolet light, for surface water discharge or reclaimed water use. With SBRs there is no need for return activated sludge (RAS) pumps and primary sludge (PS) pumps like those associated with conventional activated sludge systems. Biosolids generated from the treatment process will require management, either through stabilization, dewatering and disposal or storage with contracted disposal.

SBR systems have been successfully used to treat municipal wastewater and they are especially suited for wastewater treatment applications characterized by low or intermittent flow conditions like Yacolt. However, higher level of maintenance associated with sophisticated controls, automated switches, and automated values are required compared to conventional systems. Also, there seems to be potential for discharging floating or settled sludge during DRAW or decant phase with some SBR configurations. Potential plugging of aeration devices during selected operating cycles, depending on the aeration system used, have also been reported. Based on these disadvantages, an SBR is not explored further as a treatment alternative for Yacolt, given the town’s preference for ease of operation.

#### 8.1.1.3 Oxidation Ditches

An oxidation ditch is a modified activated sludge treatment process that utilizes long solids retention time to remove biodegradable organics. Similar to an SBR, primary treatment is not typically required prior to an oxidation ditch. Following preliminary treatment (screening), wastewater enters the oxidation ditch, where the activated sludge process occurs. It consists of an oval shaped channel equipped with mechanical aeration and mixing devices. The screened wastewater is aerated and mixed with the return activated sludge. Surface aerators, such as brush rotors, disc aerators, draft tube aerators, or fine bubble diffusers are used to circulate the mixed liquor and maintain the solids in suspension. The oxidation ditch effluent is settled in a separate clarifier.

An anaerobic basin may be added prior to the ditch to enhance phosphorus removal. An anoxic tank may be added upstream of the ditch to achieve higher levels of denitrification. Generally, the process consists of two separate aeration basins, the first anoxic and the second aerobic. Wastewater and return activated sludge (RAS) are introduced into the first reactor which operates under anoxic conditions. Mixed liquor then flows into the second reactor operating under aerobic conditions. The process is then reversed and the second reactor begins to operate under anoxic conditions. Several modifications to the oxidation ditch design have been developed to remove nutrients in conditions cycled between the anoxic and aerobic states.

Activated sludge processes such as oxidation ditch or extended aeration are feasible but would require substantially more civil work and capital investment due to the large treatment volume required. The Oxidation Ditch alternative was not evaluated in detail due to the Town's preference for ease of operation and low capital cost. One major disadvantage of this technology is the large upfront cost involved due to the substantial amount of structural work (i.e., concrete tankage construction costs) required to meet flows and loads as well as the high cost of subsequent expansions.

#### 8.1.1.4 Packaged Membrane Systems: Membrane BioReactor (MBR)

A Membrane Bioreactor (MBR) system combines the biology of an activated sludge process with membrane filtration to provide effluent quality that meets the most stringent standards for effluent reuse. An MBR system is often the preferred treatment process where high effluent quality is the desired goal. The MBR system employs a suspended microorganism biomass to convert biodegradable organic compounds and nutrients in wastewater into more biomass. The biomass is separated from the wastewater using a membrane filter (rather than the gravity settling in a conventional activated sludge process).

A packaged membrane plant (Figure 8.1) is a pre-engineered integrated membrane bioreactor package that consists of a Flow Equalization tank, Fine screen, Anoxic basin, Pre-Air basin, Membrane Bioreactor basins, a membrane cleaning system, disinfection system, system control (PLC), and Waste Activated Sludge (WAS) handling (available separately in the market). Additional information is available in Technical Memorandum No. 2 in Appendix B and in Appendix F. This type of unit would be suitable for Yacolt.

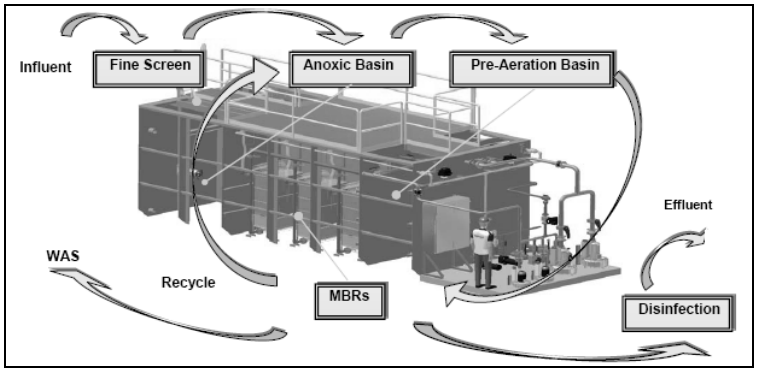


**Figure 8.1: Packaged Membrane Systems (MBR) (Courtesy: Enviroquip)**

The plant influent enters the flow equalization tank and then passes through an automatic fine screen before entering the anoxic basin, where the nitrates, recycled from the MBR's, are converted to nitrogen gas. The resulting liquor is transferred to the Pre-air basin where fine bubble aeration is used to provide oxygen for carbonaceous BOD removal and conversion of ammonia to nitrates. The partially stabilized biomass then flows to the MBR's, where integral air diffusers mix the influent and allow further conversion of ammonia to nitrates by delivering supplemental oxygen to the biological system. The membranes filter the treated wastewater to remove particulate matter and also provide a positive barrier to pathogens. The permeate is disinfected and discharged, whereas the thickened biomass is recycled to the anoxic basin. The waste sludge is removed on a regular basis and stored. The effluent has to be disinfected for reuse or surface discharge.

The MBR systems have a relatively small footprint when incorporated in a complete treatment plant and produce very high quality effluent. As it is modular, it is easily expandable allowing additional tanks or membrane units to be added for future flow increases. A shop fabricated packaged MBR systems for small communities can be delivered more cost-effectively than a site-built treatment plant.

The effluent water quality limits incorporated for Yacolt for a packaged MBR system are set at a maximum of 10 mg/L, 10 mg/L, and 1 mg/L for BOD, TSS, and NH3-N based on the 20 year influent flow and loadings. However, MBR systems are capable of producing <3 mg/L, <3 mg/L, and <0.5 - 1 mg/L for BOD, TSS, and NH3-N. Enviroquip recommends two membrane basins with one row of membrane per basin. There will be five membrane units per basin, with a total of 10 membrane units. There are 200 cartridges per unit with a surface area of 15.60 sq.ft. per cartridge. The membrane basin volume is approximately 19,000 gallons/basin with design MLSS of 10,000 mg/L, plant HRT of 10.2 hours, design plant SRT of 22 days, and a food to mass ratio of 0.06. Other parameters of the membrane zone, anoxic zone, pre-aeration zone, pumps, blowers, chemical cleaning are included in Enviroquip's Preliminary Budget Proposal in Appendix F. The packaged MBR treatment system provided by Enviroquip also includes a headworks unit among other equipment listed in the Preliminary Budget Proposal in Appendix F. The preliminary drawing of the packaged MBR basin layout is also located in Appendix F.

Based on a planning level quote from Enviroquip, the capital cost of a packaged MBR with capacity to treat 0.29 MGD is estimated at $ 4.2 million which equates to $7.7/gallon. An additional $1.5 million is included for land acquisition, site work, building, disinfection and solids storage (sludge lagoon). Therefore, the total capital cost for a 0.29 MGD MBR system is estimated to be $5.7 million, which is more expensive than other treatment technologies discussed in this chapter. Although the MBR plants are typically automated, the greater quantity of motorized equipment and high degree of automation requires more preventative maintenance, and a higher level of operator sophistication and certification. The overall O&M costs are in the range of $180,000 per year and include Labor and Administration, Biosolids handling, Electrical, Chemical, and Replacement and Repair.

#### 8.1.1.5 Packaged Biological Nutrient Removal Systems (Aeromod)

The Aeromod's SEQUOX (Figure 8.2) is a packaged biological nutrient removal activated sludge process that offers the benefits of sequencing aeration with continuous clarification. The process allows for effective denitrification and is capable of producing low levels of effluent total nitrogen and phosphorus. SEQUOX incorporates a selector tank to provide preconditioning of raw wastewater to inhibit filamentous growth. The selector tank promotes improved solids settling. It has no moving parts below the water surface. It offers relatively simple operation and has a small footprint. Additional information is available in Technical Memorandum No. 2 in Appendix B.

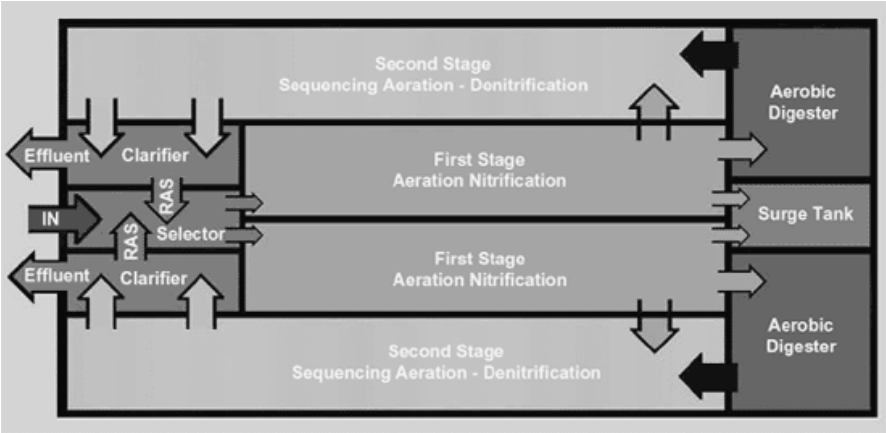


**Figure 8.2: Packaged Biological Nutrient Removal System (Aeromod)**

The capital cost is expected to be lower than that of a conventional activated sludge treatment system because is a packaged system. The process is frequently used for small municipal applications and allows for effective denitrification and is capable of low levels of effluent total nitrogen and phosphorus. Modular package systems like Aeromod or packaged Membrane Bioreactor (MBR) systems could serve to meet current flows. As flow and loadings increase, additional modules could be added as required.

Aeromod provided a base design for a system to service Yacolt. Based on the planning level cost estimate of $9/gallon for an Aeromod system, the capital cost to treat 0.29 MGD is estimated at $ 2.6 million. This cost includes headworks and the Aeromod treatment process. An additional $1.5 million is included for Land acquisition, Site work, building (lab and maintenance), disinfection, and solids storage/treatment (sludge lagoon) and $0.6 million (including contractor markups) is included for tertiary filtration (DynaSand filter) for additional phosphorus removal (to reduce discharge levels to < 1 mg/L). Therefore, the total capital cost for a 0.29 MGD BNR system is estimated to be $ 4.7 million. The O&M cost for a 0.29 MGD BNR System is estimated to be $150,000 per year.

All of the suspended growth treatment technologies described above are capable of providing adequate treatment for Yacolt. However, it should be noted that septic tank effluent delivered via a STEP collection system typically has a high concentration of ammonia, resulting in the need for greater treatment volume for ammonia removal, and increased risk of ammonia breakthrough. As a result, an activated sludge treatment system for this application requires a strict sampling and monitoring schedule and a skilled operator to ensure consistent effluent quality. Also, if a STEP collection system is employed, the raw wastewater may have insufficient organic and nutrient contact to support a healthy sludge for the process. This could affect denitrification processes due to lower BOD. However, the City of Yelm (Washington) uses a STEP collection system and a Suspended Growth Treatment System (SBR) and has not reported any significant problems.

## 8.1.2 Fixed Film Treatment System

### 8.1.2.1 Recirculating Media Filters (RMF) – Sand/Gravel

A Recirculating Media Filter (RMF) technology is used to treat septic tank effluent, which is subject to clarification, by filtering it through a medium of coarse sand, gravel, peat, or

manufactured media taking advantage of naturally occurring microbes (Figure 8.3). RMFs function simultaneously as aerobic, fixed-film bioreactors and physical straining filters. Gravel or sand filters are typically used only with septic tank effluent. Dissolved organic material is consumed and aerobically degraded by microorganisms on the filter bed. Physical removal of TSS occurs as the filter media strains solids from the liquids, while the wastewater re-circulates and percolates through the filter medium multiple times, allowing continued filtering and increased bacterial decomposition. As with the other secondary process circulation system it is capable of biological removal of nitrogen. As wastewater moves through the filter and becomes oxygenated, ammonia is transformed into nitrate. In the recirculation tank, conditions are anoxic (low in dissolved oxygen) and bacteria breaks down nitrates and releases nitrogen back to the atmosphere (i.e. denitrification). Additional information is available in Technical Memorandum No. 2 in Appendix B.

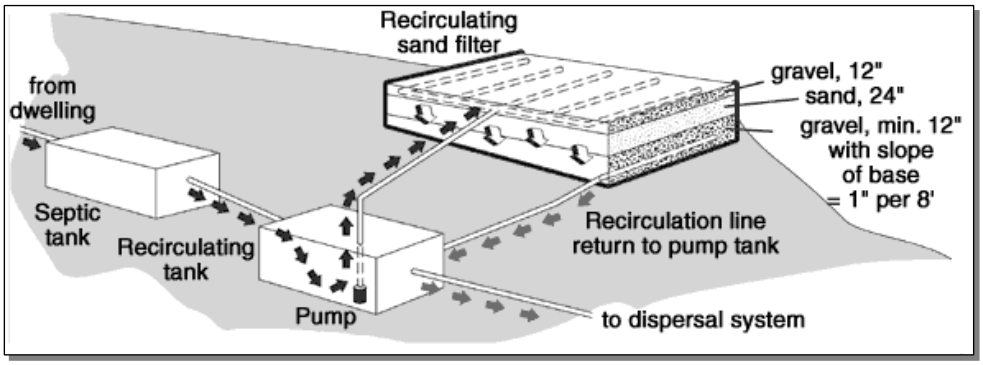


**Figure 8.3: Recirculating Media Filter**

RMF's with sand/gravel media have a lower capital cost compared to RMF's with synthetic media. The space requirements for sand/gravel RMF's are somewhat greater than the synthetic fabric system. However, they are a viable alternative because of the simple design and construction and the ability to handle higher strength waste. Also, if the space is available, the simplicity of operation may be an acceptable trade off over synthetic filters.

The most significant operational issue for an RMF system is bio-fouling. As filter media ages, the biofilm on the media grows thicker, thereby reducing the effective area for percolation and the media bed's hydraulic loading capacity. In such cases, the upper layer should be removed and replaced with new media. Adding air to the system and providing periodic purging/sparging may minimize this problem. Proper operation of the RMF system is required to reduce biofouling and ensure infrequent maintenance events. Although the synthetic filters are easier to maintain compared to sand/gravel filters, gravel media are more robust and require less frequent maintenance. A maintenance contract is strongly recommended. Maintenance includes inspecting flow meters, pumps, recirculation tank, recirculation pump, distribution systems, media and effluent quality, lab testing and cleaning and repairing when needed. It should also be noted that RMFs (sand/gravel) may not be suitable for grinder pump or gravity collection systems.

#### 8.1.2.2 Orenco Systems: Advantex

The AdvanTex Treatment System (Figure 8.4) is a fully engineered synthetic fabric media system that is purchased as a complete modular package. It is the most commonly used synthetic media filter in Oregon, manufactured by Orenco Systems, and works similar to that of a Recirculating Media (sand/gravel) Filter. Synthetic media is commonly used in RMF's

because of its longevity and effectiveness. It comes as a totally pre-manufactured package, including AdvanTex textile filter, tanks, Biotube pumping package, and control panel.

The AdvanTex textile filter is a lightweight, highly absorbent material system that treats large quantities of wastewater in a smaller space then a traditional RMF (sand or gravel media). Apart from BOD/TSS removal, the wastewater also undergoes biological removal of nitrogen. Within the filter, aerobic conditions exist that are ideal for microbes that convert ammonia to nitrate (nitrification). AdvanTex filters can be configured so that the filtrate re-circulates back to the high-carbon, low-oxygen environment at the inlet end of the processing tank, which is ideal for microbes that reduce nitrates to nitrogen gas (denitrification). Additional information is available in Technical Memorandum No. 2 in Appendix B.

**Figure 8.4: Recirculating Media Filter (Advantex)**

The effluent can be distributed subsurface in a shallow drainfield for polishing and disposal or, disinfected for reuse or surface discharge. Effluent disposal options for the Town of Yacolt are discussed in the Disposal Alternatives Technical Memorandum.

AdvanTex systems enable individual modules to be isolated and cleaned without requiring a complete system shutdown and they require less space compared with sand/gravel filters. Maintenance is relatively simple and a periodic maintenance schedule (quarterly to annually) is recommended. AdvanTex Treatment Systems can be equipped with control panels that automatically notify operators of irregular conditions.

Based on a planning level cost estimate of $10/gallon for a RMF (sand/gravel) system, the capital cost of a RGF (sand/gravel) with capacity to treat 0.29 MGD is estimated at $2.9 million. An additional $1.5 million is included for land acquisition, site work, building (lab and maintenance), disinfection, and solids storage (sludge lagoon). Therefore, the total capital cost for a 0.29 MGD RGF (sand/gravel) system is estimated to be $4.4 million. The O&M cost for a 0.29 MGD RMF (sand/gravel) System is estimated to be $120,000 per year.

Based on a preliminary level budgetary cost quote from Orenco, the capital cost of an AdvanTex System with capacity to treat 0.14 MGD is estimated at $ 1.5 million. Based on this quote, the capital cost of an AdvanTex System with a capacity of 0.29 MGD is estimated at

$3.1 million, which equates to $10.7/gallon. An additional $1.5 million is included for land acquisition, site work, building (lab and maintenance), disinfection, and solids storage (sludge lagoon). Therefore, the total capital cost for a 0.29 MGD AdvanTex system is estimated to be $4.7 million. The O&M costs for a 0.29 MGD AdvanTex System is estimated to be $120,000 per year and include component maintenance, system maintenance, pumping and electrical costs.

Based on maintenance requirements, capital costs, and the level of treatment required, a sand/gravel (Figure 8.3) or fabric (Advantex) media (Figure 8.4) RMF seems to be a reasonably cost effective option. However, RMFs are capable of effectively removing BOD/TSS down to 20 mg/L only and needs additional treatment to remove constituents down to 10 mg/L. They can effectively remove Ammonia-N down to 5 mg/L., but are not capable of removing phosphorus to the 0.1-1 mg/L range. Due to the concerns about the ability to meet effluent quality needs, RMFs (sand/gravel or Advantex) do not appear to be a desirable treatment system to use for this application and are not evaluated further.

### 8.1.3 Lagoon System

Biolac (Figure 8.5) is an activated sludge process using an extended solids retention time (SRT). Biolac utilizes lined earthen basin with an integral clarifier for secondary clarification. The use of lined earthen basins rather than concrete tanks results in reduced capital costs for the Biolac system. Screened influent enters the Biolac basins where fine bubble diffuser (BioFusers) assemblies are suspended above the basin floor by the BioFlex moving aeration chains. Fine bubble membrane diffusers that are attached to floating aeration chains are moved across the basin by the air released from the diffusers. The moving BioFusers are reported to provide efficient mixing of the basin contents as well as high oxygen transfer at low energy usage. Installation of submerged aeration piping is not required because of the floating aeration chains. The chains can individually be controlled by an air valve providing flexibility in fine-tuning the system to the oxygen demand of the waste. Control of the air flow distribution to the Biolac's moving aeration chains varies the basin dissolved oxygen content by creating a unique moving wave of alternating multiple aerobic and anoxic zones known as Wave Oxidation. This repeated cycling of environments nitrifies and denitrifies the wastewater in a single basin without mixed liquor recycle pumping or additional external basins, thereby resulting in biological nutrient removal. Phosphorus removal within the range of < 2 mg/L is reported to have been achieved with the addition of a pre-anaerobic zone. The effluent from the Biolac basin is settled in an integral clarifier which shares a common wall with the basin. The clarifier being an integral part of the basin would also result in reduced capital cost. The biomass is separated from the mixed liquor in the clarifier. The clarifier effluent can be polished further for additional phosphorus removal (within the range of 0.1 – 1 mg/L) using a sand (DynaSand) filter. It could then be disinfected chemically or via ultraviolet light. Sludge removal from the clarifier is achieved by an airlift pump discharging to a sludge pump. A floating flocculating rake mechanism travels back and forth across the length of the clarifier to aid in solids settling. A facultative sludge lagoon would be constructed for treatment and storage of sludge that is collected from the clarifier. Additional information is available in Technical Memorandum No. 2 in Appendix B and Parkson's Preliminary Budget Proposal for Biolac Treatment System in Appendix F.

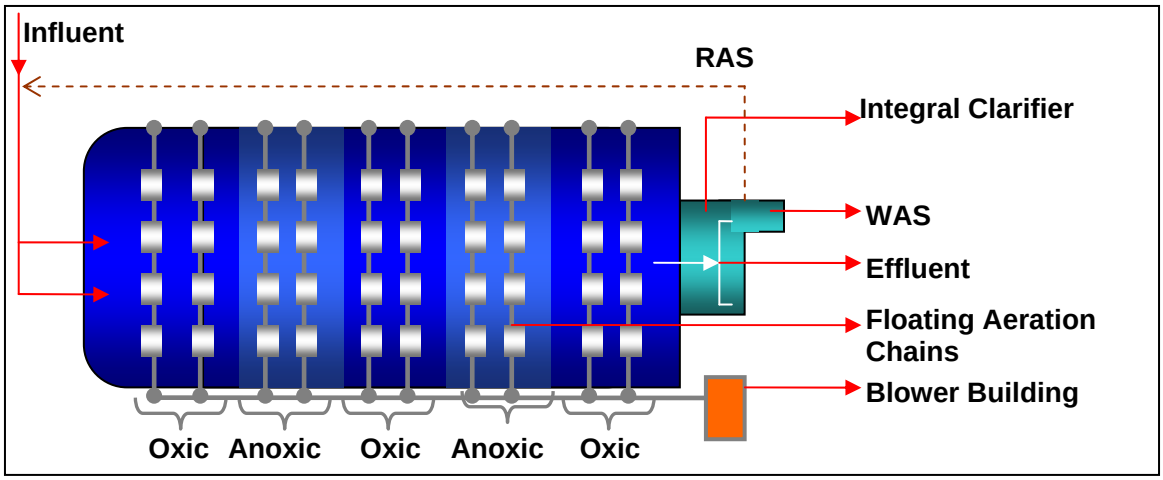


**Figure 8.5: Biolac Lagoon Systems (Courtesy: Parkson Corporation)**

The effluent water quality parameters for a Biolac system are reported to be 10 mg/L, 10 mg/L, and 1 mg/L for BOD, TSS, and NH3-N based on the 20 year influent flow and loadings for Yacolt. The treatment system proposed for Yacolt includes two earthen basins with integral clarifiers attached to the effluent end of each basin. The installation would be constructed with parallel trains allowing for full redundancy in the aeration and clarification basins. The design criteria for the basins are based on a Food to Mass ratio of 0.05, a MLSS of 3,000 mg/L, HRT of 1.58 days, and SRT of 69 days. The aeration requirements for the Biolac System are detailed in Table 1 of Parkson's Preliminary Budget Proposal in Appendix F. The size of each integral clarifier is 20 ft x 20 ft. The size of each extended aeration basin is 70 x 61 ft at grade. The basins will be double-lined with 60 mil smooth HDPE and will have a leak detection system between the two layers. The Biolac treatment system package also includes the Helisieve in-channel screen which combines fine screening (6 mm) with conveying and compacting in one integral unit and a simple bagger system for collecting the compacted screenings out of the channel. A redundant screen has been included. The package also includes three 15 hp positive displacement blower assemblies (includes one spare blower for redundancy) including motor and required accessories. The preliminary drawings of the Biolac system process diagram, BioFlex/BioFuser assembly, integral clarifier, aeration blower assembly, the Helisieve in-channel screen, etc are located in Appendix F.

Based on a cost quote from Parkson, the planning level budgetary capital cost of a Biolac System (including in-channel screen, parallel treatment trains with integral clarifiers, blower assemblies, etc) with a capacity of 0.29 MGD is estimated at $2.4 million (including excavation, disinfection, complete installation, liner and leak protection system and contractor markups), which equates to $8.40/gallon. The contractor mark ups include 5% for mobilization, 15% for overhead and profit, 8.2% for sales tax, 25% for Engineering Legal and Administration, and 25% for contingencies. An additional $1.5 million is included for land acquisition, site work, building (lab and maintenance), disinfection, and solids storage (sludge lagoon) and $0.6 million (including contractor markups) is included for tertiary filtration (DynaSand filter) for additional phosphorus removal (to reduce discharge levels to < 1 mg/L). Therefore, the total capital cost for a 0.29 MGD Biolac system is estimated to be $4.5 million. The O&M costs for a 0.29 MGD Biolac System is estimated to be $150,000 per year and include Component Maintenance, System Maintenance, Pumping and Electrical costs.

### 8.1.4 Pump Station(s) and Pressure Main Transport of Wastewater to the Closest Treatment Facility (City of Battle Ground).

A pump station(s) and transmission pressure main that transports wastewater from the Town of Yacolt to the City of Battle Ground is a possible alternative to a Yacolt treatment plant. Battle Ground is the closest urban area served by a wastewater treatment facility. To effectively transmit flow to Battle Ground, a pump station and pressure main would need to be installed. The anticipated pressure main route would be along existing public roads (Clark County and Battle Ground owned) or the existing railroad (Clark County owned) route. The highway route that was reviewed is approximately 14.4 miles in length and would likely require the need for two (2) separate pump stations; however, at this level a single pump station has been used in the pricing of this option. Based on preliminary sizing, an 8" pressure main was used, but only a single pump station was included in the costing at this time. Cost estimates for the pressure main and pump station are over $12 million not including acquisition of any private easements. In addition, operation and maintenance of the system would need to be determined. It is highly unlikely that the system would operate effectively due to the low flows generated in the system. In addition, odors would be generated due to the length and long residence time in the pressure main and pump station wetwell.

In addition to the transmission and pumping costs from Yacolt to Battle Ground, there would also be costs incurred for Battle Ground to transmit the flow to the current County system as their current system downstream is nearing capacity. The flow would then proceed to the Salmon Creek Treatment plant, where agreement of the existing partners to accept a new agency discharge would be required and an agreement would need to be reached for a buy in cost for the capacity. It is anticipated that the Salmon Creek costs would be approximately $15/gallon plus the cost to transmit the flow to the County's transmission system. This would add an additional $2-$3 million to the cost. Additional information is available in Technical Memorandum No. 4 in Appendix B. Due to the high capital cost and the high cost of connection on a per user basis, this option will not be explored further.

### 8.1.5 Comparison of Treatment Technologies

The objective of this section is to compare the following shortlisted wastewater treatment technologies qualitatively based on their ability to meet Yacolt's treatment requirements, and quantitatively based on costs.

- Conventional Activated Sludge Treatment
- Packaged Membrane BioReactor System
- Package Biological Nutrient Removal
- Lagoon Systems – Biolac

### 8.1.6 Treatment Capabilities – Reduction of Constituents

The individual processes have been reviewed for capabilities in minimizing discharge of BOD, TSS, ammonia-nitrogen, and phosphorus to potential receiving water bodies. Table 8-1 discusses the treatment capabilities of these technologies in reducing the above listed constituents.

**Table 8-1: Treatment Technology Capabilities – Reduction of Constituents**

| Technology | BOD | TSS | Ammonia-Nitrogen | Phosphorus |
|---|---|---|---|---|
| CAS | Effectively removes BOD to 10 mg/L. Meets the needs of Yacolt | Effectively removes TSS to 10 mg/L. Meet the needs of Yacolt | Effectively removes NH3-N to 10 mg/L. Additional ammonia reduction can be achieved through baffling of aeration basin. | Effectively removes Phosphorus to 1 -2 mg/L with a pre-anaerobic zone and chemical addition. Can effectively remove to 0.1 -1 mg/L using an additional filtration process |
| BNR-Package Plant (Aeromod) | Effectively removes BOD to 10 mg/L. Meets the needs of Yacolt | Effectively removes TSS to 10 mg/L. Meets the needs of Yacolt | Effectively removes NH3-N to 0.5-1 mg/L. Meets the needs of Yacolt | Effectively removes Phosphorus to 1 -2 mg/L with a pre-anaerobic zone and chemical addition. Can effectively remove to 0.1 -1 mg/L using an additional filtration process |
| MBR | Effectively removes BOD to 3 mg/L. Meets the needs of Yacolt | Effectively removes TSS to 3 mg/L. Meets the needs of Yacolt | Effectively removes NH3-N to 0.5 - 1 mg/L. Meets the needs of Yacolt | Effectively removes Phosphorus to 0.1 - 1 mg/L. Meets the needs of Yacolt |
| Lagoon (Biolac) | Effectively removes BOD to 10 mg/L. Meets the needs of Yacolt | Effectively removes TSS to 10 mg/L. Meets the needs of Yacolt | Effectively removes NH3-N to 1 mg/L. Meets the needs of Yacolt | Effectively removes Phosphorus to 1 -2 mg/L with a pre-anaerobic zone and chemical addition. Can effectively remove to 0.1 -1 mg/L using an additional filtration process. Meets the needs of Yacolt |

#### 8.1.6.1 Pollutants of Concern

Pollutants of concern will be reviewed in conjunction with those constituents that are or could be generated from discharges. Pollutants of concern will be reviewed during the facility planning process. Sampling to determine the constituents in both the water supply wells (from Clark Public Utilities) as well as the receiving bodies will be performed. Following testing we can address the potential of impacts to the selected receiving stream as well as groundwater. Aerobic treatment, disinfection possibly combined with a membrane installation would provide maximum potential removal of these pollutants. More information is discussed in the Chapter 9 Discharge.

### 8.1.7 Cost Analysis

Table 8-2 provides cost analysis based on anticipated costs for the shortlisted treatment technologies. Costs are broken down into capital cost for the treatment system; cost for land acquisition, site preparation, and solids handling (facultative sludge lagoon), and total capital cost. Table 8-3 provides the annual and present worth operating and maintenance costs based on power, parts, labor, and testing. The present worth O&M costs were calculated based on a typical time period of 20 years at 4% interest rate. Table 8-4 provides the total overall present worth costs for the different treatment technologies.

Costs associated with discharge improvements are not included in these costs but can be found in Chapter 9 and are anticipated to be common to the selected technology.

Headworks costs and units are included in some of the estimates provided below. Headworks installations will consist of:

| Technology | Headworks Needs | Costs |
|---|---|---|
| CAS | Screening & grit removal | Included in cost/gallon listed |
| MBR | Screening & grit removal | Included in quote provided |
| Aeromod | Screening & grit removal | Included in cost/gallon listed |
| Lagoon (Biolac) | Screening & grit removal | Included in quote provided |
| Pump station | Not required | NA |

**Table 8-2: Treatment Technologies - System Costs**

| Type | Capital Cost | Land/Site / Solids | Total Plant Capital Cost | Comments |
|---|---|---|---|---|
| Conventional Activated Sludge | $3,800,000* | $1,500,000 | $5,300,000 | May not be as economical and simple form of activated sludge treatment facility compared to package plants. |
| Membrane Bioreactor Process | $4,200,000 | $1,500,000 | $5,700,000 | Current technology that many entities are moving forward with. Technology is effective, but high in operational costs; higher level maintenance expertise is necessary. |
| Packaged BNR (Aeromod) | $3,200,000* | $1,500,000 | $4,700,000 | Reduced footprint, reasonable cost and operating factors |
| Lagoon System (Biolac) | $3,050,000*, ** | $1,500,000 | $4,550,000 | Straight forward technology with ability to provide necessary treatment. The least expensive option. Would require a larger footprint and may not be as aesthetically pleasing as other options. |
| Pump Station and Pressure Main | $11,300,000 (conveyance) | $3,000,000 (buy-in) | $14,300,000 | Highest cost alternative; pump station and pressure main = $11.3m; estimated plant buy-in at $15/gal. |

**Note:**
*Additional cost of $625,000 has been included in the capital cost to account for tertiary filtration for additional phosphorus removal (< 1 mg/L).
** Additional cost of $95,000 has been included in the capital cost for a 60 mil smooth HDPE double liner with leak detection system for the lagoon system.

**Table 8-3: Treatment Technologies - Present Worth Operation Costs**

| Type | Annual O&M | 20 Year Present Worth O&M | Comments |
|---|---|---|---|
| Conventional Activated Sludge | $150,000 | $2,039,000 | Based on power, parts, labor. testing |
| **Membrane Bioreactor Process** | **$180,000** | **$2,446,000** | **Based on power, parts, labor, testing** |
| Packaged BNR (Aeromod) | $150,000 | $2,039,000 | Based on power, parts, labor, testing |
| **Lagoon System (Biolac)** | **$150,000** | **$2,039,000** | **Based on power, parts, labor, testing** |

**Table 8-4: Treatment Technologies - Total Present Worth Costs**

| Type | Total Plant Capital Cost | 20-year PW O&M | Total Present Worth |
|---|---|---|---|
| Conventional Activated Sludge | $5,300,000 | $2,039,000 | $7,339,000 |
| **Membrane Bioreactor Process** | **$5,700,000** | **$2,446,000** | **$8,146,000** |
| Packaged BNR (Aeromod) | $4,700,000 | $2,039,000 | $6,739,000 |
| **Lagoon System (Biolac)** | **$4,550,000** | **$2,039,000** | **$6,589,000** |

### 8.1.8 Recommendations and Conclusions

The previous sections described the different treatment technologies and analyzed the treatment capabilities and capital and O&M costs. Table 8-5 lists the advantages and disadvantages of the treatment technologies based on these analyses and the treatment process.

**Table 8-5: Comparison of Treatment Technologies**

| Type | Advantages | Disadvantages |
|---|---|---|
| Conventional Activated sludge | Straightforward technology with moderate cost. | Less cost-effective than package systems for small areas. |
| Membrane Bioreactor Process | Most expensive, but provides highest baseline level of effluent quality. | Highest level of operator sophistication required. Highest capital and O&M cost, Highest maintenance effort. |
| Package Biological Nutrient Removal (Aeromod) | Inexpensive with good operating history. | De-nitrification is questionable. Footprint is larger than some. |
| Lagoon (Biolac) system | Least expensive with excellent operating history; simplest operation. | Initially selected alternative |

Even though the Convention Activated Sludge process is a well established technology, a typical CAS ($11/gallon) is less cost effective then packaged systems for small communities like Yacolt. Packaged treatment plants significantly reduce the costs to construct individual components such as aeration basins and clarifiers because they use common-wall construction. A packaged Biological Nutrient Removal System (Aeromod) is relatively less expensive ($9/gallon) than a CAS, however other technologies like Lagoon System (Biolac) are cost effective and are capable of producing effluent meeting the anticipated discharge quality.

A lagoon system has been selected as the preferred alternative based on its lower costs (capital and operating), simplicity of operation, efficient treatment capability and suitability for flow and effluent water quality constituents. The recommended treatment technology is the Biolac lagoon system with filtration if necessary to meet requirements for phosphorus and ammonia; however packaged MBRs will continue to be reviewed based on the high level of treatment afforded by this technology, even though it had the highest capital and operating costs. The system offers a relatively compact footprint, and ease of expandability. Hence, a lagoon system (Biolac) and a membrane system (packaged MBR) will be reviewed in depth during the development of the Facility Plan.

Based on the treatment capabilities listed in Table 8-1 and provided by the manufacturers, the effluent discharge water quality parameters that the Yacolt plant could achieve are:

| Technology | BOD | TSS | NH3-N | Phosphorus |
|---|---|---|---|---|
| MBR | < 3 mg/L | < 3 mg/L | < 0.5 -1 mg/L | < 1 mg/L |
| Lagoon (Biolac) | < 10 mg/L | < 10 mg/L | < 1 mg/L | < 1 – 2 mg/L<br>< 1 mg/L (with tertiary filtration) |

The capital cost and the 20 year present worth operating and maintenance cost for a packaged MBR system are $5,700,000 and $2,446,000 respectively, resulting in a total present worth cost of $8,146,000. The total treatment plant's capital cost for a Biolac System

is $4,550,000. The 20 year present worth operating and maintenance cost is $2,039,000, with a total present worth cost of $6,589,000. Pretreatment needs are anticipated as preliminary screening and grit removal. It is anticipated that this would apply to all technologies. Note: these values are for treatment only and do not include solids, disinfection or discharge needs.

## 8.2 Solids

Solids handling options could be addressed in multiple ways for the Town of Yacolt. Based on the low amount generated, the ultimate decision will be based on cost and operational impact to the Town. It is anticipated that the town would generate approximately 1,300 wet tons of solids (2% +/-) – 35 to 40 dry tons/year of solids. The following options have been reviewed and are discussed below:

- Class A biosolids development – drying
- Class A biosolids development – lime stabilization
- Class B Local land application
- Class B offsite contract hauling for land application
- Facultative lagoon on-site storage with contracted removal
- Haul of undigested sludge to a regional entity

Class A biosolids development – drying. While a feasible option, it would be costly for the Town. Drying technology would include some type of dewatering and thickening, dryer equipment, additional piping at the input end and some type of covered receiving facility. A Class A product could be locally distributed based on the low quantity; however, odor issues for raw sludge may make this option undesirable. Addition of a digester would increase capital costs even further. Costs are estimated at $6-$10 million for thickening and drying equipment. Disposal would be assumed to be local at no cost to the Town at this time.

Class A biosolids development – lime stabilization. While a feasible option and less costly then drying technology, this technology would result in the need for thickening equipment, piping and a receiving/lime addition facility. Odor would also be a concern for a non-digested sludge and digestion would raise the overall costs. Total capital costs are estimated at $5-$6 million without digestion. This technology is more labor intensive then drying resulting in higher operations needs.

Class B Local land application. This option would either be liquid or cake. A liquid option would save the cost of dewatering but would require some thickening. A site would need to be acquired and permitted. Local forested lands may be a reasonable option; however, much of the potentially available land is impacted by steep slopes which would reduce the availability of liquid application. For the same reason application of cake would also be limited due to the lack of a large reasonably flat site for land application. Additional capital cost could be incurred if the Town needed to acquire the application equipment. Capital costs for these options including thickening, aerobic digester, a storage tank with mixers, loading facility and application equipment are estimated at $4-$5 million.

Class B offsite contract hauling for land application. Based on the small amount generated this option could be difficult with regard to finding a vendor who would be willing to participate. Costs would be incurred based on the need for thickening, digestion, a storage tank with mixers, loading facility are estimated at $ $4-$5 million. Operations (haul and disposal costs) would be in addition and are estimated at $3,000/load.

Facultative lagoon on-site storage. The benefits of this option would be minimal initial capital costs (lagoon construction estimated at $ 500,000) and the ability to extend some of the costs for 5-10 years. There would be some concerns for odor, leakage but these items would be minimized in the design by lining the lagoon and providing an adequate water cap. Design would be for 10 years of storage, at which time a contract would be developed for removal and disposal. This would allow the Town additional time to estimate and acquire funds for disposal through a rate review.

Haul of undigested sludge to a regional entity. This is an option that other agencies in Clark County are using (City of Ridgefield). While it is not a perfect option due to Yacolt's remote location and lack of proximity to major arterials, it is still viable based on the small volume of sludge that would be generated. Capital costs for this option would require a sizeable storage tank with mixers or aeration and a loading area. The benefits would be that once capital costs are expended the resulting impact would be an ongoing operating expense and would generally be defined and budgeted as O&M costs. We have been able to obtain approval from both Clark County and the City of Vancouver for accepting sludge from Yacolt (letters attached in Appendix D. There would be additional trucking costs unless the Town purchased their own truck. Costs are estimated at $2-$3 million for capital and annual hauling costs of

Based on discussion with Yacolt offsite hauling of undigested sludge to a regional entity has been selected to minimize capital costs and optimize budgeting of average costs.

Several solids alternatives were qualitatively considered, as described in the table below.

**Table 8-6: Solids Alternatives**

| Alternative | Comments |
|---|---|
| Class A (Drying) | Dryer - $6-$8 million (includes odor scrub, dry storage, BFP)<br>Down side – high odor. Limited marketability due to odor. 90% solids<br><br>Annual O&M $500,000 |
| Class A (Lime Stabilization) | Screw press installation (hoppers, blend tank, polymer, dewatering - $5-$6 million (60% solids). High odor, limited marketability but lime would make it more desirable.<br><br>Annual O&M $300,000 |
| Class B Liquid - (Digestion / Land App) | Aerobic Digester – $2-$3 million<br><br>Haul off in wet season- Dewatering would be more beneficial for a long haul – probably not a feasible option<br><br>Specialty application vehicle or equipment - $300,000 |

| Alternative | Comments |
|---|---|
| Class B Cake (Digestion-Land App) | Digester – $2-$3 million<br><br>Belt Filter Press or Screw Press or Centrifuge – $500,000<br><br>Storage or haul off - $1.5 million<br><br>Application Equipment - $200,000 |
| Facultative Sludge Lagoon | Lined lagoon - $500,000<br><br>10 year disposal costs - $500,000<br><br>Annual O&M $10,000 |
| Regional Solids Handling by Partner Agencies | Aerated Sludge storage tank - $2-$3 million<br><br>O&M – $75,000<br><br>Haul costs = $500/load= $75,000 (3 loads/week) |

The Facultative Sludge Lagoon is the preferred alternative but off site hauling to a regional entity will be reviewed during the Facility Plan stage. Adequate site potential is available and for a lagoon, capital costs are lowest and anticipated haul off of digested solids is estimated at $500,000 in ten years.

## 8.3 Disinfection

Chlorination using sodium hypochlorite and Ultraviolet (UV) disinfection are the two technologies considered for the treated effluent disinfection for the Town of Yacolt. Due to the relatively small size of the plant and the anticipated relatively low chlorine feed rate, an onsite sodium hypochlorite system may be effective. While chlorination is certainly more cost effective than UV, the disadvantages such as need to handle, transport, or store chemicals, and the potential need for offsite dechlorination to limit chlorine residual in the discharge outweighs its benefits.

UV disinfection of wastewater has been used in the USA for over 20 years, due to its disinfection efficacy and the advantages it offers. It is a physical process rather than a chemical disinfectant, which eliminates the need to handle, transport, or store chemicals which are typically toxic, hazardous, and/or corrosive. This is particularly advantageous considering the location and accessibility to the Town of Yacolt. There is no residual, thus removing any harmful effects to humans or aquatic life and it removes the need to add chemicals to remove disinfectant residuals. Power costs to operate UV can result in higher O&M costs compared to chemical disinfection; however the other advantages it offers along with its simplicity to operate makes it highly desirable as the recommended disinfection system for Yacolt. The estimated cost of a UV system to treat a similar amount of waste is $150,000.

## 8.4 Site Layout

The site layout required to serve Yacolt will range from 4,000 sf for an MBR plant to 10,000 sf for a Biolac plant. Sizing information is provided below:

**Table 8-7: Site Sizing**

| Technology | Tankage Needs | Ancillary Facilities | Facultative Lagoon |
|---|---|---|---|
| MBR | Membrane chambers – 2 @ 14'x18'<br>Pre-aeration Chamber 25'x39'<br>Anoxic chamber 18'x39'<br>Facultative Sludge Lagoon 100'x200' | Lab-operations-generator building 24'x60'<br>Blower-chemical building 20'x30'<br>Parking – 20'x60'<br>Headworks – 20'x20' | 1 acre |
| Biolac | Main channel (x2)<br>Clarifier (x2) – 20'x20'<br>Aeration (x2)– 70'x60<br>Facultative Sludge Lagoon 100'x200' | Lab-operations-generator building 24'x60'<br>Parking – 20'x60'<br>Blower-chemical building 20'x30'<br>Headworks – 20'x20' | 1.5 acres |

Total acreage needs will be less than 1 acre. It is recommended that the Town consider treatment plant sites of 1.5-2 acres to provide some buffering from adjacent uses and to support future expansion needs. Costs are estimated at $200,000 to $300,000. Site costs for a ground discharge option are discussed in the discharge Chapter (9).

# Section 9: Discharge

This section addresses effluent discharge alternatives from a new wastewater treatment facility for the Town of Yacolt. Following discussions of available options with the Department of Ecology, effluent discharge for Yacolt is restricted to two primary options: Direct discharge to surface water (East Fork of the Lewis River) or subsurface discharge to groundwater. A combination of these two options will also be reviewed during the Facility Planning process as additional information is acquired. While there are other possible discharge options, they have limitations within the receiving bodies that have been restricted by Ecology. Alternatives for discharge have been identified based on reconnaissance-level evaluations of local climate, surface water hydrology, hydrogeology, topography, and soils. Discharge alternatives are evaluated primarily on hydrologic feasibility with discussion of other technical and regulatory factors. Updated information for climate and hydrogeologic conditions is provided in this section as a basis for the analysis of potential impacts to groundwater for the land-based discharge alternatives. Discharge values were reviewed based on initial flow (197,000) and ultimate build out projected flow (1,250,000 gallons/day – Sewer Coalition Planning Study, 2009) to ensure that the discharge location is suitable for both short-term and long-term use by the Town.

## 9.1 Effluent Discharge Alternatives

There are three classes of effluent discharge considered in this evaluation: surface water discharge, discharge to groundwater (discharges to the soil or subsurface fall into this category), and discharge to another wastewater treatment system. Key factors including local environmental conditions, regulatory requirements, public opinion, and cost are used to assess the suitability of each alternative. The following specific effluent discharge alternatives were evaluated for the Town of Yacolt:

1. Large On-Site Sewage Systems (LOSS)
2. Surface irrigation with wet weather effluent storage
3. Subsurface discharge to groundwater
4. Direct discharge to surface water
5. Indirect subsurface discharge to surface water
6. Pipeline to a remote treatment facility

Each of these alternatives is described below. Based on our preliminary analysis, subsurface discharge to groundwater and direct discharge to surface water appear to have the greatest potential for successful implementation.

## 9.2 Physical Conditions in the Yacolt Valley

### 9.2.1 Climate

Long term records for weather stations to the north of the Yacolt Valley report average annual precipitation amounts between 70 and 76 inches (Figure 1). Privately-operated rain gauges in the valley often record annual precipitation of 85 inches or greater.

For six months of the year, monthly precipitation averages greater than seven inches. During this period, high groundwater levels may restrict discharge to the soil or subsurface, primarily in the southern portion of the valley. Additional evaluation of local groundwater conditions is provided below.

During the drier months (June through September), evaporative demand exceeds rainfall in most years. During this season, discharge to either surface water or groundwater is feasible and likely to be beneficial during dry years. During the summer season, supplemental irrigation or rain of between 14 and 20 inches is needed for maximum crop production.

### 9.2.2 Surface Water

Outflows from the Yacolt Valley are to the East Fork of the Lewis River to the south and Cedar Creek (ultimately the North Fork Lewis River) to the north (Figure 2). Three major creeks flow north to south through the valley: Yacolt Creek flows south along the western edge of the valley floor, Big Tree Creek and Weaver Creek drain the northeast and eastern portions of the valley. The confluence of these creeks is located in the southern part of the valley approximately one mile from the East Fork of the Lewis River. In this area, the valley is quite wet. There are wetlands along each creek in this area.

### 9.2.3 Geology and Groundwater Conditions

The U. S. Geological Survey map for the Yacolt area shows that the valley floor sediments are glacial outwash deposits which consist of unconsolidated to poorly consolidated pebbly to cobbly gravel to sand, with clay layers and discontinuous deposits throughout the valley. Based on well logs on file with the Washington Department of Ecology (Ecology), sediments throughout the Yacolt Valley appear to consist of a variable mixture of gravel and sand with variable percentages of silt. Information from available well logs indicates that the total thickness of unconsolidated sediments in the valley ranges from about 60 to 120 feet, with inferred thinning towards the south end of the valley.

The soil survey for the Yacolt area (Natural Resources Conservation Service, 2010) shows that over ninety percent of the Yacolt Valley is mapped as Yacolt loam and Yacolt stony loam. The Yacolt loam soil is deep and consists of 2 feet of loam underlain by stony loam to at least 5 feet depth. The Yacolt stony loam has a stony surface. The Yacolt soils have good drainage that, in the north end of the valley, results in infiltration between March and October in most years. The Gumboot silt loam occupies about 8 percent of the land area and is commonly found in wetter locations in the landscape. The soil texture includes silt loam and clayey material to at least 5 feet.

#### 9.2.3.1 Local Geology and Hydrogeology

Based on review of local water and resource protection well logs, sediments throughout the Yacolt Valley consist of a variable mixture of gravel and sand with variable percentages of silt. The total thickness of unconsolidated sediments in the valley ranges from about 60 to 120 feet, with inferred thinning towards the south end of the valley. There appear to be few distinct lithologic units present within the valley, which is consistent with the glaciofluvial environment under which the sediments were deposited. One exception is the presence of a cobbly zone that overlies bedrock in the northernmost portion of the valley; Town municipal supply Well Nos. 4,

5, and 6 are completed in this relatively coarse zone at approximately 100 feet below ground surface (BGS), which appears to thin and become finer grained towards the east and the south (Hart Crowser, 1996).

Three monitoring wells (MW-1, MW-2, MW-3) were installed by Hart Crowser as part of their 1996 study (Figure 6). Well logs are included in Appendix A. These wells are located in the northern portion of the Yacolt Valley just south of Town Well Nos. 4, 5, and 6. Sediments encountered during drilling of these three wells were predominantly silty sand and sandy gravel. Monitoring well MW-1, which is the deepest of the three and closest to Town Well Nos. 4, 5, and 6, encountered silty sand or sandy gravel at the same approximate depths where cobbles were encountered in the Town wells, thus illustrating the degree of sediment variability within the valley. Similar sediment distributions are assumed to exist throughout the northern portion of the Yacolt Valley.

Hart Crowser (1996) designated the unconfined groundwater system present within the valley as the Yacolt Aquifer. Because the distribution of valley sediments appears to consist of variable assemblages of gravel, sand, and silt, properties of the Yacolt Aquifer (e.g., hydraulic conductivity) are expected to be equally variable. Based on available information, there do not appear to be extensive low-permeability units (silt or clay) present within the valley. Consequently, all portions of the Yacolt Aquifer appear to be in hydraulic connection and thus act as a single hydrostratigraphic unit. As mentioned previously, the Town's municipal supply wells draw from the Yacolt Aquifer, as do the majority of area residential wells. Hart Crowser derived hydraulic conductivity measurements for the Yacolt Aquifer ranging from $2 \times 10^{-3}$ to $5 \times 10^{-1}$ cm/sec, a range consistent with moderately-permeable silty sands to highly-permeable sandy gravels (Hart Crowser 1996).

#### 9.2.3.2 Groundwater Depths, Flow Directions and Gradients

Depth to groundwater in the Yacolt Valley ranges from a few feet in the southern part of the valley to perhaps more than 100 feet BGS in the northern part. Table 9-1 lists groundwater level elevations measured in monitoring wells MW-1, MW-2, MW-3 and MW-4 over the period from 2003 through 2010. MW-4 was installed in the southern portion of the town in 2006 (Figure 6). Groundwater levels in the monitoring wells fluctuated annually from about 9 to 31 feet, with an average fluctuation for wells 1-3 over this period of about 20 feet. Hart Crowser (1996) observed similar groundwater level fluctuations and also concluded that recharge to the Yacolt Aquifer occurs rapidly following major precipitation events in November and December. Monitoring well 4 (MW 4) installed in 2006 shows that groundwater levels fluctuated annually from about 14 to 48 feet, with an average fluctuation over this period of about 30 feet.

Groundwater in the Yacolt Aquifer flows generally to the south, following the topographic profile through the valley. However, Hart Crowser determined that from December through August, an east-west trending water table divide is present near the center of the Town limits in the northern portion of the valley. During this period, groundwater tends to flow from the divide either north towards Cedar Creek, or south down the axis of the valley. During September, October and November prior to large winter precipitation, Cedar Creek water level is higher than groundwater and flow is to the south.

Groundwater gradients in the Yacolt Aquifer are somewhat flat (from 0.0025 – 0.0053 ft/ft), with a slight steepening of the gradient in the southern part of the valley.

**Table 9-1: Annual Minimum and Maximum Groundwater Elevation, Feet Above Mean Sea Level**

| *Year* | *MW-1* | | *MW-2* | | *MW-3* | | *MW-4* | |
|---|---|---|---|---|---|---|---|---|
| | **Minimum** | **Maximum** | **Minimum** | **Maximum** | **Minimum** | **Maximum** | **Minimum** | **Maximum** |
| 2003 | 645.7 | 664.1 | Not Available | Not Available | 646.4 | 669.0 | | |
| 2004 | 651.5 | 668.0 | 647.4 | 667.7 | 652.0 | 671.2 | | |
| 2005 | 648.6 | 667.0 | 652.0 | 667.5 | 649.1 | 671.2 | | |
| 2006 | 646.0 | 673.8 | 656.4 | 673.7 | 646.8 | 678.0 | 641 | 674 |
| 2007 | 645.5 | 665.0 | 654.9 | 664.4 | 646.3 | 667.8 | 641 | 668 |
| 2008 | 646.7 | 672.7 | 652.0 | 673.0 | 647.5 | 677.6 | 650 | 674 |
| 2009 | 650.3 | 665.2 | 655.5 | 664.6 | 656.1 | 668.2 | 648 | 667 |
| 2010 | 665.9 | 667.8 | 665.9 | 667.5 | 669.1 | 671.2 | | 670 |

## 9.3 Large On Site Sewage Systems

Large On-Site Sewage Systems (LOSS) are permitted by Department of Health (RCW 70.118B) and are restricted in size from 3,500 gallons/day to 100,000 gallons/day. A single LOSS system would, therefore, not be a viable stand-alone alternative for Yacolt. In addition, drainfield regulations restrict uses of drainfields to domestic discharge only and therefore do not support the Town's long-term growth goals.

Table 9-2 shows estimates of the drainfield size requirements for a LOSS. While current flows could be discharged in a 14 acre drainfield, as much as 120 acres would be required to implement this discharge system for the projected build-out flow. Additional acreage must also be reserved for use as a replacement area in the future.

The local public school (an elementary school in the Battle Ground School District) does have an existing drainfield discharge system that could be incorporated into the Town's system if the School District was part of the Town's wastewater system. Requirements within the Clark County 2007 GMA update do not make allowances for or anticipate the use of a LOSS in Yacolt.

**Table 9-2: Preliminary Sizing Estimates for Subsurface Discharge and Rapid Infiltration Systems[1] Based on Loading Rates**

| Discharge Method | Design Discharge Flow | Size (25% added) |
|---|---|---|
| | **Design Flow: 197,000 gallons per day** | |
| **LOSS Drainfield** | 3 gpd/lf | **14 Ac** |
| | 5 gpd/lf | **9 Ac** |
| **Subsurface discharge** | 100 gpd/lf | **1,880 lf** |
| | 300 gpd/lf | **630 lf** |
| **Rapid Infiltration** | Acreage including resting cycles | **1.5 Ac** |
| | Lineal feet with 60 foot basin width | **1,100 lf** |
| | **Design Flow: 1,250,000 gallons per day** | |
| **LOSS Drainfield area** | 3 gpd/lf | **120 Ac** |
| | 5 gpd/lf | **70 Ac** |
| **Subsurface discharge** | 100 gpd/lf | **15,600 lf** |
| | 300 gpd/lf | **5,200 lf** |
| **Rapid Infiltration** | Acreage including resting cycles | **4.1 Ac** |
| | Lineal feet with 60 foot basin width | **3,000 lf** |

**Note:**
1 These estimates include an additional twenty five percent land area. No reserve area is included.

## 9.4 Surface Irrigation with Wet Weather Effluent Storage - Agricultural and Landscape Irrigation

Irrigation opportunities in the Yacolt area are limited both by the low irrigation requirement (14 to 20 inches per year) and the high annual precipitation. Annual precipitation has a direct impact on storage volume required to hold treated effluent from approximately October through May when the irrigation season begins. In Table 9-3, estimates of sprayfield acreage and storage volume are shown for current and ultimate design flows. The values are based on estimated storage requirements and soil water balances that account for summer irrigation, irrigation efficiency, percolation through soils, and precipitation minus evapotranspiration for both the storage surface area and irrigation areas. It is likely that neither the large acreage necessary nor the very large effluent storage requirements are practical for Yacolt.

**Table 9-3: Land Application Size Requirements**

| | 14 inch/year Irrigation Requirement | | 20 inch/year Irrigation Requirement | |
|---|---|---|---|---|
| **Design Effluent Flow (mgd)** | **Irrigated Acreage** | **Approximate Storage Volume, MG** | **Irrigated Acreage** | **Approximate Storage Volume, MG** |
| 0.197 | 150 | 55 | 110 | 55 |
| 1.27 | 1,300 | 480 | 800 | 400 |

## 9.5 Subsurface Discharge to groundwater

Subsurface discharge techniques can be used to discharge treated effluent when subsurface hydraulic properties and groundwater levels are suitable. In a small basin like the Yacolt Valley, it is often the case that surface waters provide the primary drainage on an area-wide basis. Therefore subsurface discharge flows will either discharge to underlying groundwater or flow towards surface water bodies resulting in an indirect discharge to surface water. The primary difference between these two discharge endpoints is related to regulatory requirements.

Opportunities for groundwater discharge using techniques such as drainfield discharge or rapid infiltration basins exist in the Yacolt Valley. Key local area limitations include a) the location of the Town's drinking water supply in the north end of the valley and b) the shallow groundwater and wetlands water levels in the southern portion of the valley.

In the northern portion of the Yacolt Valley, hydrogeologic conditions may be conducive to subsurface discharge to groundwater. The following sections summarize a preliminary hydrogeologic evaluation of several potential subsurface discharge sites located in the northern portion of the Yacolt Valley.

Figure 9-1 depicts the depth to groundwater for three monitoring wells in the north part of the valley. The bars in this figure show the unsaturated thickness above the water table in the northern end of the valley. This thickness, which is consistently greater than 20 feet and often much greater, shows the capacity for additional discharge of water. MW-4, in the southern part of the Town, has an unsaturated zone between 14.5 and over 50 feet thick. Available groundwater depth measurements for the two candidate sites indicate that both sites have sufficient unsaturated zones to accommodate year-round discharge.

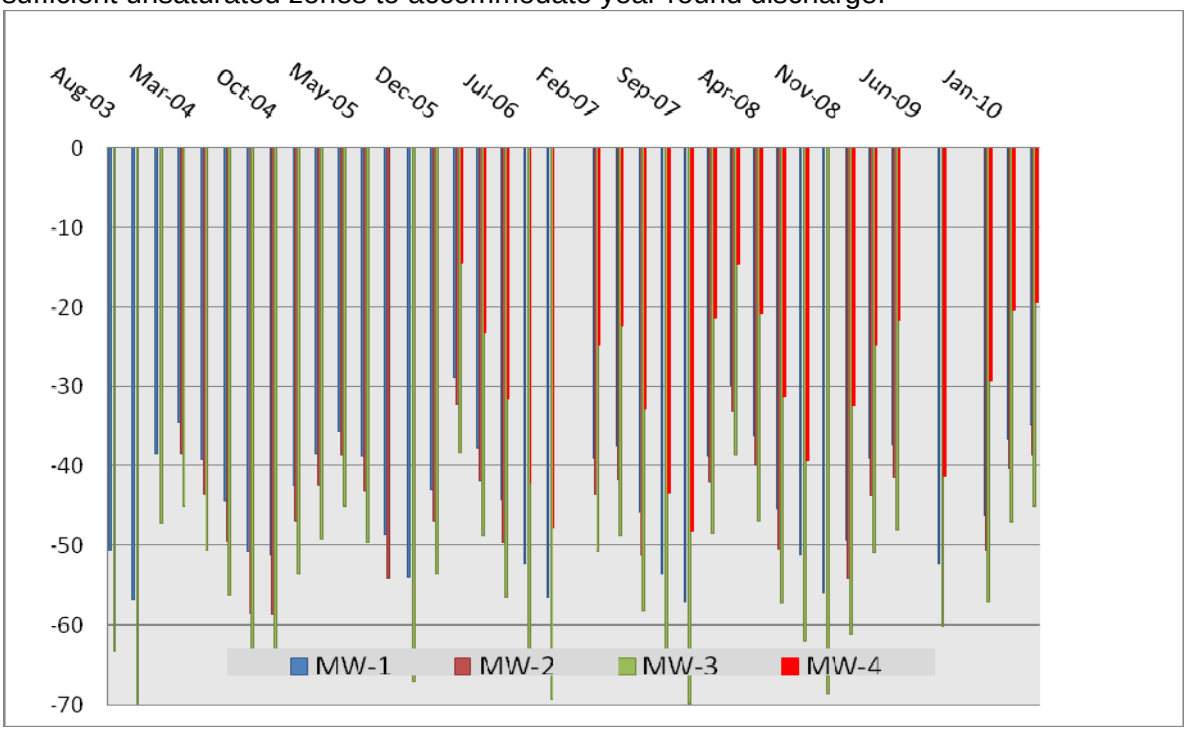


**Figure 9-1: Static Water Level, feet below ground surface.**

#### 9.5.1.1 Potential Subsurface Discharge Locations

Two areas in the vicinity of the Town of Yacolt have been identified as candidate sites for subsurface discharge of treated effluent. Initial screening was based on their location within the Yacolt Valley in areas with substantial unsaturated zone thickness, deep alluvial deposits, and willing landowners. Additionally, neither of these two potential subsurface discharge locations appear to be within the 1-year or 5-year municipal well capture zones delineated by Pacific Groundwater Group (PGG) based on Hart-Crowser's 1996 investigation and subsequently incorporated into the Town of Yacolt Wellhead Protection Plan Update (PGG, 2003). As discussed in Section 9.5.1.6, future site characterization activities are planned to better define groundwater flow conditions at and near each potential discharge location. The potential discharge locations are shown on Figure 6.

**Southeast / Hoag Street Site**. This parcel lies just east of the southeastern most developed area of the Town. South of Hoag Street, this site is at the elevation of the valley floor, approximately 695 feet. North of Hoag Street, elevations are slightly higher, ranging up to 705 feet. Soils mapped in this area are Yacolt loam, 0-3 percent slopes. In some areas, gravelly inclusions are visible. Subsurface discharge at this site could be accomplished by placing discharge facilities on either or both sides of Hoag Road, oriented east to west roughly perpendicular to the dominant groundwater flow direction. This configuration should result in optimum groundwater mixing and minimal mounding. This site location is close to MW-4 which has winter groundwater levels within 14.5 feet of ground surface. There are multiple parcels in the area that have adequate acreage to accommodate a subsurface discharge at this location based on the criteria outlined in Table 9-2. This site is outside of the local water provider 1 and 5 year capture zones as well as being outside of the Department of Health's Source Water Protection Area and down gradient of existing public wells as discussed in the Hart Crowser report.

**Church Property.** This 10-acre property is located in the northwest portion of the Yacolt Valley between North Amboy Road and Yacolt Creek. The property is currently used for pasture and forage production. Vegetation at the site does not show evidence of wet soil conditions, even at the lowest elevation portion of the site located on the western edge of the property. In fact, the riparian zone surrounding this portion of Yacolt is very narrow and has only a few facultative wetlands species present. At the time of the site investigation on 25 August 2010, the water course was dry.

The property is west of the water supply wells for the Town and is adjacent to but not within the 1-year or 5-year municipal well capture zones. According to water levels measured from 1996 through 2009 and interpretations made by Hart Crowser (1996), the groundwater flow direction at the Church property is to the north for all but two months in the late summer and fall. Although no well logs are available specifically for this property, subsurface conditions based on the well logs for MW-1 and MW-3 consist of gravelly-silty sands in the upper 10 feet, underlain by at least 70 feet of gravelly sand and sandy gravel. As shown in Figure 9-1, the thickness of the unsaturated zone in this area ranges seasonally from approximately 40 to 70 feet. There is adequate acreage at this site to accommodate a subsurface discharge system based on the criteria outlined in Table 9-2.

#### 9.5.1.2 Proposed Discharge Sizing and Layout

Sizing and layout for discharge facility alternatives were shown in Table 9-2. The calculations made using rapid infiltration sizing calculations (EPA, 2006) are used for analysis of land area requirements and potential effects of discharge on groundwater.

Rapid infiltration sizing calculations provide for dose and rest cycles in the discharge. This technique provides additional effluent polishing and increases the reliability of the discharge facility. It is anticipated that this would relate to the installation of two discharge pipes with alternating perforated sections. The discharge flow would alternate between the individual pipes to provide the rest cycle. Sizing of the lines at this time is estimated at 15" diameter. Design sizing will be established during the Facility Planning process.

The discharge facility will be elongated perpendicular to the groundwater flow direction, generally east-west. This provides maximum mixing to minimize groundwater quality impacts and will also minimize groundwater mounding. Both sites have sufficient area to allow the discharge to be oriented in this manner.

#### 9.5.1.3 Existing Groundwater Quality

The groundwater dataset for monitoring wells MW-1, MW-2, MW-3, and MW-4 includes pH, electical conductivity (EC), and [Nitrate-N + nitrite-N] measured together. Nitrate-N + nitrite-N concentrations in groundwater in the vicinity of the potential subsurface discharge areas have been consistently low, and are well below the maximum contaminant level (MCL) of 10 milligrams per liter (mg/l), as shown in Figure 9-2.

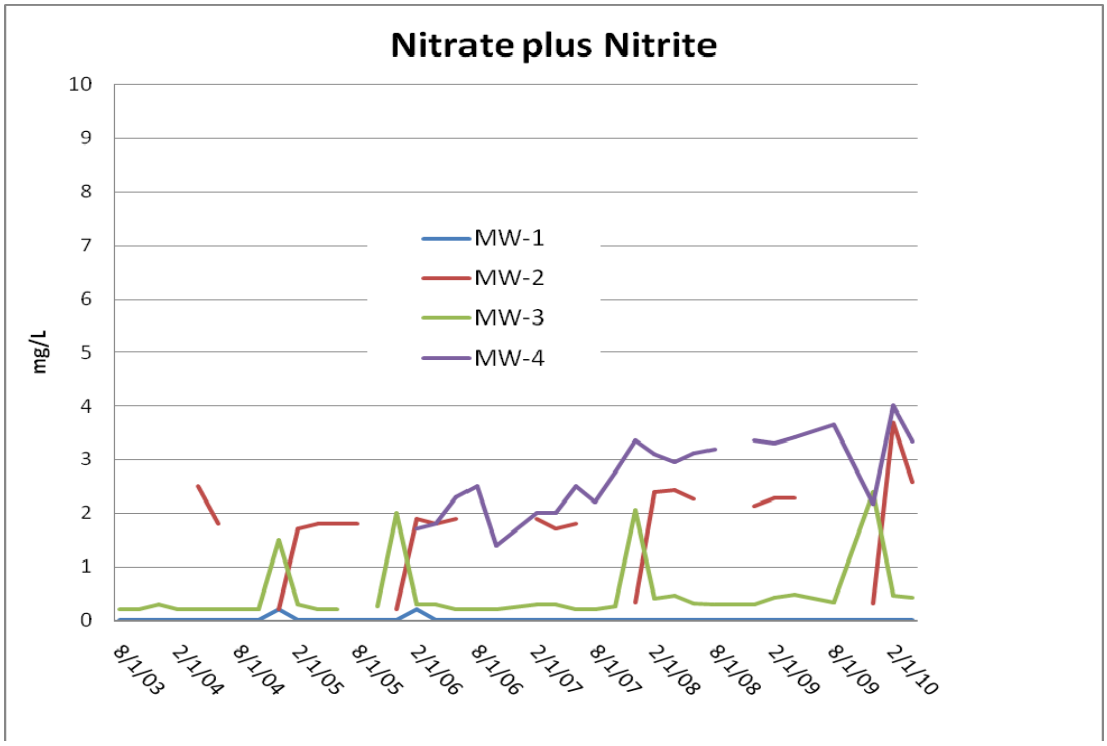


**Figure 9-2: Nitrate-N + Nitrite-N concentrations in MW-1, MW-2, MW-3, and MW-4.**

As discussed in Section 9.5.1.6, additional characterization of existing groundwater quality is planned through continued monitoring of existing and new wells and an expanded water quality parameter list.

#### 9.5.1.4 Groundwater Mounding Evaluation

Groundwater mounding resulting from discharge to groundwater was quantified using two methods in common use (Crites et al. 2000). Both calculation methods determine height of groundwater mounding assuming steady state hydraulic loading from a surface source to underlying groundwater. The methods differ in these respects:

The first method (Chapter 4 of Crites et al. (2000)) uses vertical hydraulic conductivity ($K_v$), with the implicit assumption that restricted downward flow causes groundwater mounding. The second method, (Chapter 16 of Crites et al. (2000)), uses horizontal hydraulic conductivity ($K_h$), with the implicit assumption that the rate of lateral flow controls the height of groundwater mounding. The assumptions that were included in the methods described above are as follows:

- Mounding calculations were made for 197,000 and 1,250,000 gallons per day (gpd). The discharge design incorporated a daily loading of 1.3 feet per acre.

- No evapotranspiration of irrigation water occurs, and the entire effluent discharge percolates through the soil. This is a conservative estimate, as actual evaporation at the site would likely result in less percolation.

- Subsurface hydraulic properties were based on well construction logs for monitoring wells MW-1, MW-2, and MW-3. These logs showed a range of textures dominated by sand but also including silty sand and gravelly sand.

- A range of $K_v$ values between 5 and 500 feet/day was used, based on the values for sand presented in Crites et al. (2000). Sand was chosen as the limiting layers for vertical conductivity based on well construction logs for monitoring wells MW-1, MW-2, and MW-3.

- A range of $K_h$ values between 5 and 500 feet/day was used, based on the $K_v$ values for sand presented in Crites et al. (2000). Horizontal conductivity is expected to be dominated by the sandy materials present beneath the effluent discharge area, which are documented in well construction logs for monitoring wells MW-1, MW-2, and MW-3.

- The ratio of $K_h$ to $K_v$ was assumed to be 1 to represent sandy conditions without strong horizontal layering.

- Model runs were made for 10 years. This value was selected because trial calculations showed that the groundwater mound calculated by each method came to steady state within this time period.

Results of groundwater mounding estimates at the discharge locations are presented in Table 9-4.

**Table 9-4: Estimates of Groundwater Mounding from Effluent Discharge**

| Method 1 | | | | |
|---|---|---|---|---|
| **Inputs** | **Units** | **Values** | | |
| Vertical Hydraulic Conductivity[a] | ft/day | 500 | 50 | 5 |
| Saturated Thickness of Aquifer | Ft | | 50 | |
| Application Rate | $ft^3$/day | | 1.3 | |
| Down gradient Length | Ft | | 17.1 - 142.8 | |
| Rise at Center of Mound[b] | Ft | **0.3 - 2.2** | **1.2 - 10.0** | **4.4 - 36.6** |
| **Method 2** | | | | |
| **Inputs** | **Units** | **Values** | | |
| Kh / Kv | | | 1 | |
| Horizontal Hydraulic Conductivity[c] | ft/day | 500 | 50 | 5 |
| Saturated Thickness of Aquifer | Ft | | 50 | |
| Application Rate | $ft^3$/day | | 20,053 - 167,112 | |
| Rise at Center of Mound[b] | Ft | **0.0 - 0.1** | **0.0 - 0.5** | **0.1 - 4.1** |

**Notes:**

a) Kv values for sand range from approximately 5 to 500 (Crites et al. 2000)

b) Results vary based on assumed effluent flow rate (197,000 gallons per day (gpd) to 1,250,000 gpd) and width of recharge basin (17.1 feet to 142.8 feet)

c) Kh based on Kv values for sand (5 to 500), and a Kh/Kv ratio of 1

## Results

Groundwater mounding estimates resulting from Method 1 ranged from less than 0.3 to 36.6 feet, depending on $K_v$ values of 5 to 500, and the design flow (represented by the down gradient length of the discharge area). The largest projected mounding value combined the lowest vertical hydraulic conductivity with the 1,250,000 gpd discharge rate.

Results from Method 2 ranged from 0.0 to 4.1 feet of groundwater mounding, depending on $K_h$ values of 5 to 500 and two discharge flows. These values, made with the method incorporating horizontal hydraulic conductivity, provide smaller estimates of mounding. This is commonly observed when estimated hydraulic properties are used in the analysis.

Based on the two mounding calculation methods described, groundwater mounding resulting from effluent discharge could range from negligible values to a maximum of approximately 36.6 feet under low hydraulic conductivity and high discharge flow estimates. While these values are likely to result in groundwater mounding that doesn't reach the ground surface (Figure 9-1), additional groundwater characterization shall be conducted to refine the calculations during the next phase of investigations at the Facility Planning level.

#### 9.5.1.5 Groundwater Mixing Evaluation

Steady state groundwater mixing calculations were performed to evaluate the expected downgradient groundwater concentrations of nitrate, phosphorus, and electrical conductivity after effluent discharge at the Church Property. Estimated downgradient groundwater concentrations are based on a mass balance mixing of effluent, groundwater, and rainwater.

Model inputs include (see Table 9-5):

- Upgradient groundwater concentrations presented are the average concentrations measured in groundwater samples collected between 2003 and 2009 from monitoring well MW-3, which is upgradient of the Church Property. These values are shown in the second data line of the table.

- Concentrations in precipitation are based on a study conducted by Root et al. (2004). These are shown in the first data line of the table.

- A range in effluent concentrations was used in the mixing calculations. These are shown in the third and fifth data lines in the table. The values are based on documented performance of the treatment systems proposed and, in the case of EC, estimates from other western Washington and Oregon facilities.

- The downgradient groundwater concentrations are calculated for a model domain that extends from the Church property to approximately W Jones Street. The width of the model domain is 900 feet for calculations using the 197,000 gpd flow. When the 1,250,000 gpd flow is used, the model domain was expanded in conformance with the discharge area increase required (Table 9-2).

- Aquifer saturated thickness was assumed to be 50 feet, as used in the groundwater mounding calculations.

- Hydraulic gradient was assumed to be 0.002 ft/ft, based on the measured dataset. Hydraulic conductivity was assumed to be 250 feet per day.

**Table 9-5: Groundwater Mixing Calculations**

| | **197,000 gpd flow** | | | |
|---|---|---|---|---|
| | **Flow, $ft^3$/day** | **NO3-N, mg/l** | **EC, umho/cm** | **P, mg/l** |
| Annual percolation from precipitation (61 inches/year, Hart Crowser, 1996): | 15,882 | 0.50 | 6.3 | 0.01 |
| Upgradient Groundwater: | 22,500 | **0.47** | **73** | **0.01** |
| | | **Low effluent concentrations** | | |
| Effluent discharge: | 21,995 | 1.25 | 50 | 0.05 |
| Estimated Downgradient Groundwater: | | 0.72 | 43 | 0.02 |
| | | **High effluent concentrations** | | |
| Effluent discharge: | | 4.5 | 250 | 7.5 |

| | | | | |
|---|---|---|---|---|
| Estimated Downgradient Groundwater: | | 1.7 | 105 | 2.3 |
| | | **1,250,000 gpd flow** | | |
| | **Flow, $ft^3$/day** | **NO3-N, mg/l** | **EC, umho/cm** | **P, mg/l** |
| Annual percolation from precipitation: | 58,951 | 0.50 | 6 | 0.01 |
| Upgradient Groundwater: | 60,000 | 0.47 | 73 | 0.01 |
| | | **Low effluent concentrations** | | |
| Effluent discharge: | 167,112 | 1.25 | 50 | 0.05 |
| Estimated Groundwater: | | 0.93 | 45 | 0.03 |
| | | **High effluent concentrations** | | |
| Effluent discharge: | | 4.5 | 250 | 7.5 |
| Estimated Downgradient Groundwater: | | 2.8 | 158 | 2.9 |

**Notes:**

**Groundwater Parameters**

Hydraulic Conductivity, feet per day: 250

Hydraulic Gradient, feet per feet: 0.002

| **Model Domain** | Low Flow | High Flow |
|---|---|---|
| Effluent Volume, gpd: | 197,000 | 1,250,000 |
| Cross-gradient Width, feet: | 900 | 2,400 |
| Down-gradient Length, feet: | 1,800 | 1,800 |
| Saturated thickness, feet: | 50 | 50 |
| Acreage: | 37.2 | 99.2 |
| Impermeable area, acres: | 1 | 2 |

**Results.** Table 9-5 presents a range of mixing results that address two effluent discharge rates, two effluent concentration estimates, and three water quality constituents. For the low effluent discharge condition, effluent flow and groundwater flow are approximately equal and percolating precipitation is slightly less. In the high discharge scenarios, the discharge volume is much higher than the groundwater flow volume.

Two standards were used to assess the calculated impacts to groundwater. For the extremely low groundwater concentrations of nitrate-N, EC, and phosphorus, discharge scenarios could seldom avoid some increase in groundwater concentrations. In fact, the percolation of rainwater alone impacts the groundwater, since the nitrate-N concentration for precipitation is higher than the groundwater concentration and the phosphorus value is equal. It should also be noted that the comparisons made in Table 9-5 make use of the monitoring wells in the northern end of the Yacolt Valley where water quality is notably better than that in other areas of the valley. Clark Public Utilities reports that annual sampling of the Town water supply wells from 2001 to 2010 shows a nitrate-N concentration averaging 2.1 mg/l (Clark Public Utilities. 2010 Water Quality Report). Earlier water supply well sampling reported nitrate-N values of 1.8 mg/l or less (Hart Crowser, 1996).

When the projected impact of effluent discharge to groundwater is compared to drinking water standards (10 mg/l nitrate-N and 900 umho/cm EC (based on a TDS of 500 mg/l)), the

estimated concentrations are quite low. For the case of phosphorus, groundwater impacts are small when the low effluent phosphorus estimates are used. Although there is not a common standard for groundwater phosphorus, the projected concentrations using the high effluent phosphorus values could be of concern, resulting in the need for additional phosphorus removal at the treatment facility.

The groundwater mixing calculations provided in Table 9-5 show that there are a number of discharge flow and effluent concentration combinations that result in high quality groundwater conditions. Because there are a number of unknowns, additional study during development of the Facility Plan will occur. Groundwater conditions at the proposed discharge locations shall be characterized, including both hydraulic properties and water quality. Development of more precise estimates of the quality of treated effluent shall also be a priority. Advanced treatment of both nitrate-N and phosphorus are achievable. Finally, potential groundwater impacts would be reduced if some of the effluent flow were discharged to surface water.

#### 9.5.1.6 Additional Site Investigation for Facility Planning-Groundwater Discharge

The site investigations presented in this document are based on available data. During the course of this analysis, it has become clear that additional data collection and analysis is required to further evaluate the candidate discharge locations. Additional subsurface investigation shall be conducted during the Facility Plan phase for the proposed discharge sites. In order to determine specific subsurface conditions, a boring to a depth below the lowest recorded static water level is needed. Because additional information on groundwater depth and flow direction and gradient are also needed, the boring shall be completed as a monitoring well. Selection of the location will be made in anticipation of needing a monitoring well network in the future. A sampling program to characterize subsurface hydraulic properties will also be implemented. A combination of analysis of drilling core samples and hydraulic testing of the well is proposed. Additional site characterization activities proposed to be performed as part of Facility Plan preparation are shown in Table 9-6. The table also summarizes the preliminary subsurface discharge analyses performed for preparation of this General Sewer Plan.

**Table 9-6: Proposed Site Characterization Activities for the Facility Plan Evaluation**

| | General Sewer Plan Analysis | Facility Plan Expanded Analysis |
|---|---|---|
| Characterize surface materials | NRCS soil survey information and reconnaissance-level soil borings at candidate sites. | Immediately conduct site evaluation of Church and Hoag Road properties for infiltration properties: soil investigations including profile descriptions and sampling, and infiltration or permeability testing will be performed. |
| Hydrology of the area | Based on local area climate information, observations by Town staff and consultants, and results of work by Hart Crowser and PGG. Analysis of CPU surface water and monitoring well dataset 2003 – 2009: groundwater depth, gradient, and flow direction have been completed | Expand monitoring network for surface water level, particularly in the areas nearest to Hoag Road. Verify groundwater conditions with continued monitoring; install at least one new monitoring well |

| | General Sewer Plan Analysis | Facility Plan Expanded Analysis |
|---|---|---|
| Characterize subsurface materials | Review of well logs and analyses performed by Hart Crowser (1996) and PGG. Review of driller's logs available from Ecology records | Determine location(s) for additional borings or monitoring wells. Evaluate boring logs and samples from new wells |
| Groundwater mounding analysis | Analysis based on available data from CPU and Hart Crowser. | Revised mounding calculations using measured infiltration rates and updated subsurface data. |
| Groundwater quality | Analysis of CPU monitoring well dataset 2003 – 2009 and observations made by Hart Crowser | Ongoing monitoring of existing and new wells and an expanded water quality parameter list. The current CPU data collection frequency is bi-monthly |
| Potential groundwater impacts assessment | Mixing analysis of proposed discharge volumes using estimated effluent quality and groundwater quality dataset | Make a direct evaluation of the potential for discharge flows from the Church property towards water supply wells (This requires use of both monitoring well and water supply well water levels). Update groundwater flow analysis using recent data for all wells as well as data from all new wells. Refine treatment needs for specific water quality constituents based on an expanded parameter list for groundwater sampling. |
| Evaluate potential impacts to surface water | Provide elevation information to show that nearby surface water is at a higher elevation than groundwater. | Revise assessment based on new groundwater and surface water information |

Future monitoring of existing and new monitoring wells shall consist of the parameters that have been analyzed to date, as well as additional parameters: field pH, EC, T; routine testing for NO3-N, TKN, Cl, P, and alkalinity; less frequent characterization testing for Ca, Mg, K, Na, SO4, HCO3, Fe, Mn, As, and metals (Pb, Cu, Cr, Zn, Hg, Se, Cd). Monitoring well locations will be coordinated with Clark Public Utilities to maximize the use of the information provided in analyzing time of travel and recharge impacts in the area.

#### 9.5.1.7 Emerging Contaminants

Consideration will be made for review and potential evaluation of contaminants of emerging concern if the State proposed draft rules for reclaimed water are promulgated. The current draft regulation is discussed in new section WAC 173-219-700

#### 9.5.1.8 Clark Public Utility Well Head Protection Plan

Clark Public Utility District has a 2003 update (Appendix G) to their wellhead protection plan for Yacolt. The plan states that there is susceptibility to contamination from land use activities because the wells are shallow, completed in an unconfined aquifer, and there is no substantial fine grained unit that occurs between land surface and the water table. Protection strategies

consist of monitoring of ground water and adjacent water bodies as well as measurement of water levels in the monitoring wells. It also includes septic system maintenance, public education and turf management (*Town of Yacolt Wellhead Protection Plan Update, Pacific Groundwater Group, May 12, 2003*). In addition, the "Church Property" discharge site is in proximity to the public well field. This site will be reviewed with relationship to groundwater movement prior to establishing it as a preferred discharge site.

#### 9.5.1.9 Costs

A discharge to ground transmission line distance will be approximately 4,500 feet from the south edge of the existing town limits. Actual sizing has not been determined at this time but construction estimates for a pump station and an 8-inch pressure main with 15-inch gravity perforated discharge pipes (2) were used. The pipe alignment was assumed to be located in existing road right of way, and pricing includes asphalt replacement. The pump station would be co-located with the plant to provide access to support systems (power, SCADA, etc.) and to minimize additional site improvements. The total cost includes engineering, legal, and administrative costs estimated at 30% of the construction cost. This should be consistent for either site.

**Table 9-7: Ground Discharge Option - Costs**

| System | Length | Cost/Unit | Subtotal | Total |
|---|---|---|---|---|
| Gravity discharge | 1,000 x 2 | $150/ft | $300,000 | |
| Pressure transmission | 4,500 | $50/ft | $225,000 | |
| *Pump station | | $750,000 | $750,000 | $1,657,500 |

**Note:**
* Pump station total includes costs for all options

## 9.6 Direct Discharge to Surface Water

Direct discharge into a local receiving body is a viable option for the Town of Yacolt. There is a current process underway to establish Total Maximum Daily Loads (TMDL's) for temperature and bacteria in the East Fork of the Lewis River; however, due to limited funding and staffing, completion of this process will be delayed for several years. At this time, there are several factors that should be available but cannot be determined: a) whether Yacolt could secure a load allocation; and b) whether the wastewater treatment system could be designed to meet water quality limitations, primarily temperature.

The direct discharge alternative proposal involves discharge of the treated effluent from the Yacolt wastewater treatment plant to a surface water body. The surface water body considered for direct discharge is the East Fork of the Lewis River, just downstream of the confluence with Big Tree Creek. Another potential location considered for direct discharge was the Big Tree Creek downstream of the confluence with Yacolt Creek. However, the evaluation of critical low flows revealed that Big Tree Creek flow would be insufficient to provide mixing to meet aquatic toxicity, temperature, and human health standards. In addition, the channel narrows in this area and there are recreational uses that could make the location of an outfall unacceptable.

Consequently, this section focuses solely on evaluating the potential of the East Fork of the Lewis River near the Big Tree confluence as the proposed discharge location. This section establishes the mixed water quality parameters, including, temperature, pH, ammonia-nitrogen, unionized ammonia, total phosphorus, nitrites plus nitrates, and total nitrogen under approximated acute and chronic critical conditions based on effluent and receiving water quality parameters, and then compares the results to established fresh water quality criteria. The effluent quality parameters are evaluated for treated effluent from both the Biolac Systems and the packaged Membrane Bioreactor (MBR) for year round discharge and wet weather only discharge.

### 9.6.1 East Fork of Lewis River: Flows and Water Quality Parameters

There is limited water quality data for the East Fork at the Confluence; however, flow, temperature, and other water quality data are available for a Department of Ecology station, known as the EF Lewis R nr Dollars Corner (Gauge # 27D090), located at river mile 10.2 of the East Fork, which is approximately 15 miles (estimated river length) downstream of the location of the Yacolt discharge. This information has been used for this preliminary analysis. Actual sampling will be performed at the proposed discharge location during the Facility Planning process to validate assumptions that are provided below.

The flows were estimated for year-round and Winter-only (1 October through 31 March) discharges. Typically, the critical low flows, known as the 7Q10 and 1Q10, are used in discharge analysis. The 7Q10 is the lowest 7-day average flow with an average return period of 10 years. Since data is not available for a sufficient time period to calculate statistical return period flow, the lowest 7-day average flow of 28.3 CFS during the years 2005 – 2009 was used as the 7Q10 chronic flow. The lowest 1-day flow from the data periods of interest were used to estimate the 1Q10 acute flow as 25.5 CFS. The year round and Winter-only discharge flows for the Dollars Corner gauge are listed in Table 9-8. As the proposed discharge location is located upstream in the watershed, 75 percent of the critical flows were used for the mixing calculations to account for being further up the watershed and to estimate the low flows with 10 year return period. In addition, based on Ecology Mixing rules [WAC 173-201A-400 (7)(a)(ii) and (8)(a)(ii)] a mixing volume of 2.5 percent of the adjusted critical flow (1Q10 estimate) was used to estimate acute conditions, and 25 percent of the flow was used for the chronic conditions (7Q10 estimate). A summary of receiving water and effluent flows, and the associated mixing ratios and dilution factors is provided in Table 9-8. This evaluation assumes that these dilutions can be achieved within the mixing zone areas allowed in the mixing rules. Actual mixing modeling cannot be completed at this time because of the lack of outfall design and receiving water flow and geometry information.

Temperature data for the East Fork Lewis River at Dollars Corner was only available between the years 2005 - 2009. The maximum temperature during winter (1 October through 31 March) during the years 2005 – 2009 was 15.4$^{o}$C and the year round maximum during the same years was 26.4$^{o}$C.

Other water quality data such as ammonia-nitrogen (NH3-N), nitrite plus nitrate-nitrogen (NO2+NO3-N), total phosphorus, pH, dissolved oxygen (D.O.), were also obtained for the Dollars Corner station between the periods of October 1976 – September 2009. This background data for the East Fork Lewis River at Dollars Corner is listed in Table 9-8. There

appears to be at least three outlier data points in the Dollar Corner data for total ammonia-nitrogen, which were removed from our analysis. Using Grubb's test for outliers, it appears that three ammonia values in the dataset (0.30, 0.21, and 0.12 mg/l) are much higher than the remaining 366 data points, which range from less than 0.01 to 0.08 mg/l).

**Table 9-8: Flow and Water Quality Parameters for East Fork Lewis River at Dollars Corner and Estimates at Point of Discharge**

| Receiving Water Flows | Units | Year-Round | Wet weather Only |
|---|---|---|---|
| 1Q10 estimate at Dollars Corner | CFS | 26 | 39 |
| 7Q10 estimate at Dollars Corner | CFS | 28 | 57 |
| | | | |
| Adjustment Factor for upstream discharge | Percent | 75 | 75 |
| Percent mixing – acute | Percent | 2.5 | 2.5 |
| Percent mixing – chronic | Percent | 25 | 25 |
| Acute flow mixed at discharge | CFS | 0.5 | 0.7 |
| Chronic flow mixed at discharge | CFS | 5.3 | 10.7 |

| | | Year-Round | | Wet weather-Only | |
|---|---|---|---|---|---|
| **Receiving Water Quality Parameters** | **Units** | **Max** | **Average** | **Max** | **Average** |
| Ammonia-N | mg/l | 0.3 | 0.02 | 0.30 | 0.02 |
| NO2+NO3-N | mg/l | 0.72 | 0.28 | 0.72 | 0.39 |
| Total phosphorus | mg/l | 0.0263 | 0.0034 | 0.0263 | 0.0028 |
| Unionized ammonia (NH3) | mg/l | *0.06* | *0.0001* | *0.03* | *0.0001* |
| pH | | 8.60 | 7.44 | 8.6 | 7.34 |
| Temperature | $^{o}$C | 26.4 | 11.35 | 15.4 | 7.32 |
| Total nitrogen (sum of ammonia+nitrite+nitrate) | mg/l | *1.02* | *0.30* | *1.02* | *0.41* |

**Note:**
*Numbers in Italics are estimates*
Receiving water values are the maximum for the period of record

### 9.6.2 Treatment Plant Effluent: Flows and Water Quality Parameters

There is no historical flow data from Yacolt to estimate peak wet weather flow and average wet weather flow, as the treatment plant has not yet been constructed. Therefore, peaking factors for the periods of potential discharge were applied to the dry weather design flow to estimate these critical effluent flows. The design dry flow, peaking factors, estimated peak flow (acute) and the estimated monthly average peak flow (chronic) are listed in Table 9-9.

Two different types of treatment processes are considered in this planning study, a packaged Membrane Bioreactor (MBR) and a Biolac system. The typical water quality parameters for wastewater treatment plant effluent from these two treatment processes are listed in Table 9-9. These estimates are based on information from vendors and literature provided.

**Table 9-9: Flow and Water Quality Parameters for Wastewater Treatment Plant Effluent**

| **Effluent Flow** | **Units** | **Year-Round** | **Winter Only** |
|---|---|---|---|
| Design dry weather flow | CFS | 0.373 | 0.373 |
| Wet weather peaking factor | Percent | 250 | 250 |
| Highest monthly average factor | Percent | 150 | 200 |
| Estimated Peak Flow (acute) | CFS | 0.933 | 0.933 |
| Estimated monthly average peak (chronic) | CFS | 0.560 | 0.746 |
| **Effluent Water Quality Parameters** | **Units** | **MBR Effluent** | **Biolac Effluent** |
| Ammonia-N | mg/l | <0.5 | <1.0 |
| NO2+NO3-N | mg/l | *1.25* | *4.5* |
| Total phosphorus | mg/l | <0.5 | *7.50* |
| Flow | CFS | 0.42 | 0.42 |
| Unionized ammonia NH3 | mg/l | *0.003* | *0.006* |
| pH | units | *7.20* | *7.20* |
| Temperature Year round max | $^{o}$C | *25.* | *25.* |
| Temperature wet weather max | $^{o}$C | *20* | *20* |
| Total nitrogen (sum of ammonia+nitrite+nitrate) | mg/l | <3.0 | <10.0 |
| Dissolved oxygen | mg/l | *0* | *0* |

**Notes:**

- *Numbers in Italics are estimates*
- Wet weather and high month factor are estimated

### 9.6.3 Comparison of Mixed Water Quality Parameters to Established Fresh Water Criteria

The water quality parameters of the mixed waters were analyzed using the effluent from both treatment processes and compared against established fresh waters criteria from Human Health Criteria (EPA National Recommended Water Quality Criteria: 2002 (EPA 822-R-02-47)), WAC 173-201A (Nov. 2006), and National Toxics Rule (40 CFR 131.36). The following sections detail the data, assumptions, and criteria applied for each water quality parameter.

#### 9.6.3.1 Temperature

Temperature data for the periods of interest at the East Fork Lewis River at Dollars Corner was obtained from Department of Ecology's Gauge 27D090 during years 2005 – 2009. The maximum year-round and winter period temperature at East Fork Lewis River during this time period at Dollars Corner was 26.4$^{o}$C and 15.4$^{o}$C respectively.

The maximum year-round and wet period temperature of the effluent from both the packaged MBR and Biolac system is conservatively assumed to be 25$^{o}$C (year round) and 20$^{o}$C (winter) respectively.

The year-round chronic and acute flow flows within the mixing zones of 5.3 and 0.48 CFS are used for the receiving water to calculate the year-round mixed water temperature. The wet

weather-only chronic and acute flow of 10.7 CFS and 0.72 CFS are used for the receiving water to calculate the winter-only edge of mixing zone water temperatures. Similarly, chronic and acute year-round and Winter-only effluent flows were used as shown on Table 9-9.

Based on these parameters, the temperature of the mixed waters is estimated to be 26.3$^{o}$C for chronic year-around discharge, 25.5$^{o}$C during acute year-round discharge, 15.7$^{o}$C during chronic winter-only discharge, and 17.9$^{o}$C during acute Winter-only discharge.

The temperature standard for char spawning and rearing is 12°C; however char are not present and therefore this standard does not apply. The Core Summer Salmonid Habitat Temperature Standard is 16$^{o}$C. The temperature standard for salmonid spawning, rearing, and migration is 17.5 °C; however, based on Ecology's aquatic life use mapping for the East Fork Lewis River, the 16$^{o}$C Core Summer Habitat Temperature standard is applicable. When the stream temperature exceeds the standard, cumulative human action cannot cause an increase in stream temperature of more than 0.3°C. When the ambient temperature is below the standard, temperature may only be increased by 1.25°C.

Temperature and flow data from Dollar Corner station Gauge 27D090 for the period of October 1976 through September 2009 (monthly, but with some gaps) was used to evaluate temperature impacts over a range of receiving water temperature and flow conditions. For winter months, wet weather effluent was assumed to be the peak wet weather flow (0.993 CFS) and winter effluent temperature (20$^{o}$C); for summer months, the dry weather design flow (0.373 CFS) and projected summer effluent temperature (25$^{o}$C) was used to calculate receiving water temperature for the chronic and fully mixed conditions (i.e., for chronic, 25 percent of 75 percent of the Dollar Corner flow was used, for fully mixed, 75 percent of the flow was used). This analysis is provided on spreadsheet in Appendix H.

The effluent never exceeds the acute temperature standard of 33$^{o}$C (WAC 173-201A-200(1)(c)(vii)C), so no further assessment of acute temperature standards apply. During the summer months, the receiving water ambient temperature can exceed the 16.0$^{o}$C standard, so no warming above 0.3$^{o}$C when fully mixed is allowed. The maximum increase for the fully mixed condition was 0.36$^{o}$C; but this never occurred when the receiving water temperature was above 16$^{o}$C. The greatest temperature increase that occurred when the ambient temperature was over 16$^{o}$C was 0.11$^{o}$C. At no time did the discharge cause an increase of the ambient receiving temperature above the 16$^{o}$C standard under fully mixed conditions.

During the winter period, the water temperature is below these standards, and these standards are met at the edge of the chronic mixing zone. In addition, there is a limit on temperature increase.

At times when the background ambient temperature is cooler than the assigned threshold criterion, point sources are permitted to warm the water by only a defined increment: $t_i$.

Calculated as follows:

$t_i$ =28/(Ta+7)

$t_i$ = 28/(15.4+7) =1.25$^{o}$C

where $t_i$ temperature increase and $T_a$ is ambient temperature

When fully mixed, the winter temperature increase is:

$$(0.56 \text{ cfs} \times 20\ ^{o}C + 21.25 \text{ cfs} \times 15.4^{o}C)/(0.56 \text{ cfs} + 21.25 \text{ cfs}) - 15.4 = 0.12^{o}C$$

Therefore, there is no issue with winter temperature increase.

Using the lowest available flow period and highest estimated temperature, when fully mixed the maximum year round temperature increase is:

$$(0.56 \text{ cfs} \times 25^{o}C + 21.25 \text{ cfs} \times 26.4^{o}C)/(0.56 \text{ cfs} + 21.25 \text{ cfs}) - 26.4 = -\ 0.04^{o}C$$

Therefore, the temperature is actually a decrease and there is no increase in the temperature on a year round basis.

Based on these criteria, the wastewater treatment plant's effluent water quality would potentially meet the water quality standard for temperature during the winter-only discharge for both chronic/acute conditions and the year-round discharge under acute conditions. During chronic year-round discharge, the edge of the chronic mixing zone water temperature exceeds 16 $^{o}$C; however, when fully mixed it does not cause an increase in stream temperature of more than 0.3 $^{o}$C. Detailed calculations for the temperature water quality parameter are shown in Appendix H.

#### 9.6.3.2 pH

The pH data for the East Fork Lewis River at Dollars Corner was also obtained from Dollars Corner Station 27D090 for the years 1976 - 2009. The maximum pH at East Fork Lewis River at Dollars Corner during the year-round and winter-only periods was 8.6. The maximum year-round and winter period pH of the effluent from both the packaged MBR and Biolac system is conservatively assumed to be 7.2. The values from Table 9-7 were used for year-round and winter-only chronic and acute flows for the receiving water. Similarly, chronic and acute year-round and winter-only effluent flows were obtained from Table 9-8

Based on these parameters, the pH of the mixed waters is estimated to be 8.08 for chronic year-around discharge, 7.37 during acute year-round discharge, 8.19 during chronic winter-only discharge, and 7.44 during acute wet weather-only discharge.

The pH standard for water quality is in the 6.5-8.5 range. Based on these criteria, the wastewater treatment plant's effluent water quality would potentially meet the water quality standard for pH during both year-round and winter-only discharge (Appendix H).

#### 9.6.3.3 Ammonia-Nitrogen (NH3-N) and Un-ionized Ammonia (NH3)

Based on the ionized ammonia-nitrogen ($NH4^{+}$-N) data obtained from Dollars Corner Station 27D090 for the years 1976 – 2009, the maximum $NH4^{+}$-N for both year-round and winter-only time periods was 0.3 mg/l. The wastewater treatment plant's effluent from the MBR process and the Biolac process is estimated to be < 0.5 and < 1.0 mg/l.

For the partially mixed water ammonia at the chronic and acute mixing zone, the chronic and acute year-round and winter-only flow values were obtained from Table 9-8 for the receiving water. Similarly, chronic and acute year-round and winter-only effluent flows were obtained from Table 9-9. Based on these parameters, the NH4+-N of the mixed waters at chronic mixing zone with effluent from MBR and Biolac is estimated to be 0.32 and 0.37 mg/l respectively for year-round and 0.31 and 0.35 mg/l respectively for winter-only discharge under chronic critical flow (Appendix H). The $NH4^{+}$-N of the mixed waters at acute mixing zone with effluent from MBR and Biolac is estimated to be 0.43 and 0.76 mg/l respectively for year-round and 0.41 and 0.69 mg/l respectively for winter-only discharge under acute critical flow (Appendix H).

Free ammonia (NH3-N) and ionized-ammonia (NH4+-N) represent two forms of reduced inorganic nitrogen which exist in equilibrium depending upon the pH and temperature of the waters in which they are found. Of the two, the free ammonia form is considerably more toxic to organisms such as fish and, therefore, we pay considerable attention to the relative concentration of this particular contaminant. Lastly, this free ammonia is a gaseous chemical, whereas the NH4+ form of reduced nitrogen is an ionized form which remains soluble in water.

The un-ionized ammonia for the East Fork Lewis River at Dollars Corner (year-round and winter-only values), MBR effluent, Biolac effluent, the mixed water from the MBR effluent, and the mixed water from the Biolac effluent were calculated based on the following equation (DEQ, Michigan, 2007) which is a function of total ammonia-nitrogen (mg/l), temperature ($^{o}$C), and pH.

$$NH_{3_m} = \frac{NH_{3+4_m}}{1+10^{(0.09018+\frac{2729.92}{T+273.15}-pH_m)}}$$

Using this equation and the worst-case effluent ammonia concentration estimate (highest ammonia (1 mg NH4-N from Biolac) highest pH and highest temperature; the condition that would produce the highest unionized ammonia in equilibrium), the un-ionized ammonia (NH3-N) at acute and chronic conditions during year-round, summer only and winter only discharge periods were calculated. This calculation was made by first calculating the pH and temperature of the mixed water at the acute and chronic mixing zone using the flow and receiving water quality data summarized in Table 9-8 and the effluent flow and projected water quality parameters summarized in Table 9-9. The results of these calculations are summarized on Table 9-10 below.

**Table 9-10: Summary of Ammonia Evaluation Results**

| | Summer | | Winter | | Year Round | |
|---|---|---|---|---|---|---|
| | Acute 1Q10 | Chronic 7Q10 | Acute 1Q10 | Chronic 7Q10 | Acute 1Q10 | Chronic 7Q10 |
| Mixing Ratio | 0.9:1 | 14:1 | 0.8:1 | 11:1 | 0.9:1 | 14:1 |
| Dilution Factor | 1.9 | 15.1 | 1.8 | 12.5 | 1.9 | 15.1 |
| Dollar Corner pH (average) | 7.5 | | 7.3 | | 7.4 | |
| Dollar Corner Temperature (max) | 26.4 | | 15.4 | | 26.4 | |
| Dollar Corner NH4-N | 0.08 | | 0.07 | | 0.08 | |
| Effluent pH | 7.2 | | 7.2 | | 7.2 | |
| Effluent Temperature | 25 | | 20 | | 25 | |
| Effluent NH4-N | 1 | | 1 | | 1 | |
| pH at Acute Mixing Zone (from Ecology Spreadsheet) | 7.3 | | 7.3 | | 7.3 | |
| Temperature at Acute Mixing Zone | 25.7 | | 18.0 | | 25.7 | |
| Ammonia (NH4) at Acute Mixing Zone | *0.57* | | *0.59* | | *0.57* | |
| Unionized Ammonia (NH3) at Acute Mixing Zone | *0.0072* | | *0.0036* | | *0.0067* | |
| pH at Chronic Mixing Zone (from Ecology Spreadsheet) | | 7.5 | | 7.3 | | 7.4 |
| Temperature at Chronic Mixing Zone | | 26.3 | | 15.8 | | 26.3 |
| Ammonia (NH4) at Chronic Mixing Zone | | *0.14* | | *0.14* | | *0.14* |
| Unionized Ammonia (NH3) at Chronic Mixing Zone | | *0.0028* | | *0.0009* | | *0.0023* |
| Total Ammonia Criteria (from Ecology Spreadsheet) | **16.85** | **0.95** | **18.391** | **2.014** | **17.51** | **0.947** |
| Unionized Ammonia (NH3) Criteria from Ecology Spreadsheet) | **0.257** | **0.023** | **0.138** | **0.015** | **0.249** | **0.019** |
| Meets both NH3 and NH4 Criteria | Yes | Yes | Yes | Yes | Yes | Yes |

**Note:**

*Italic = Final concentrations used for comparison to standards*
**Bold = Standards used for comparisons**

The $NH4^{+}$-N and un-ionized ammonia criteria for fresh water was calculated based on Chapter 173-201A WAC (Amended November 20, 2006). An example calculation of the criteria is shown in Appendix H. The acute and chronic criteria for total ammonia nitrogen and unionized ammonia criteria are given in Appendix H. Based on these criteria, the wastewater treatment

plant's effluent water quality would potentially meet the water quality standard for unionized ammonia for chronic and acute flow conditions and the total ammonia for acute flow conditions.

#### 9.6.3.4 Total Phosphorus

The total phosphorus data for the Dollars Corner station 27D090 was available for the years 1976 - 2009. The maximum total phosphorus at Dollars Corner for year-round summer and winter-only discharge is given in Table 9-7. For completely mixed waters, 75% of the 7Q10 flow was used for the receiving waters, as the proposed discharge location is located upstream in the watershed.

The total phosphorus in the wastewater treatment plant's effluent from the MBR quote is estimated to be < 0.5 mg/l. The total phosphorus in the influent stream of two wastewater treatment plants in the neighboring locations (Salmon Creek Treatment Plant and La Center) was estimated to be 7.5 mg/l. The total phosphorus in the influent wastewater to the Yacolt treatment processes was assumed to be in a similar range. It is conservatively assumed that there is no phosphorus removal in the Biolac process, though in reality some phosphorus uptake and transfer to solids would occur. Also, with the addition of a pre-anaerobic zone at the head of the Biolac basin and the addition of chemicals such as alum to precipitate phosphorus, additional phosphorus removal can be realized and the effluent phosphorus levels can be expected in the range of 1 -2 mg/l. For further phosphorus removal, chemical treatment and a tertiary filter can be implemented downstream of the Biolac system. The Biolac configuration could be modified to accommodate a pre-anaerobic zone and chemical addition. Further reduction of total phosphorus in the Biolac effluent could be realized with the addition of a DynaSand filter downstream of the process. This process is expected to produce an effluent with phosphorus levels less than 0.1 mg/l. The effluent is equivalent in total P, so no distinction is made between the treatment processes in the following analysis.

Based on these parameters, the amount of total phosphorus in the fully mixed waters with effluent from MBR and Biolac is estimated to be approximately 0.14 and 0.15 mg/l respectively for year-round discharge and for winter-only discharge (Appendix H).

The water quality criteria for total phosphorus could be anticipated within the range of 0.1 – 1 mg/l. However, the receiving water maximum value is 0.14, so there is no assimilative capacity for mixing using the Biolac effluent maximum receiving water value (receiving water maximum concentration is higher than the projected effluent concentration). Using the average value for Dollar corner (0.016 mg/l summer, 0.020 mg/l winter, and 0.018 mg/l year round averages), the fully mixed concentrations would be 0.03 mg/l for MBR and 0.02 mg/l for biolac under all seasons. Based on these criteria, the wastewater treatment plant's effluent water quality would meet the water quality standard for phosphorus.

#### 9.6.3.5 Nitrite+Nitrate Nitrogen (NO2+NO3-N)

The maximum year-round and winter-only nitrite+nitrate-nitrogen (NO2+NO3-N) data for the Dollars Corner station was also available for the years 1976 – 2009 and are summarized in Table 9-7. For completely mixed waters, 75% of the 7Q10 flow was used for receiving waters, as the proposed discharge location is located upstream in the watershed.

The wastewater treatment plant's effluent NO2+NO3-N is estimated based on the difference between the total nitrogen and total ammonia-nitrogen. Based on this assumption, the amount of NO2+NO3-N in the effluent from MBR and Biolac is estimated to be approximately 1.25 and 4.5 mg/l respectively.

Based on these parameters, the amount of nitrite+nitrate-nitrogen in the mixed waters with effluent from MBR and Biolac is estimated to be approximately 0.73 and 0.82 mg/l respectively for year-round discharge and 0.73 and 0.79 mg/l respectively for winter-only discharge (Appendix H).

The water quality criteria for nitrite+nitrate-nitrogen is established for fresh waters from Human Health Criteria (EPA National Recommended Water Quality Criteria: 2002 (EPA 822-R-02-47)) as < 10 mg/l. Based on this criteria, the wastewater treatment plant's effluent water quality from both the MBR and Biolac process would meet the water quality standard for Nitrite-Nitrate for both year-round and winter-discharge (Appendix H).

#### 9.6.3.6 Total Nitrogen

The total nitrogen data for the Dollars Corner station was not available. Hence, it was estimated as the sum of the maximum amount of total ammonia nitrogen and nitrite+nitrate-nitrogen during the years 1976-2009. The maximum total nitrogen at Dollars Corner is estimated as 1.02 mg/l for both year-round and winter-only time periods. For completely mixed waters, 75% of the 7Q10 flow was used for receiving waters, as the proposed discharge location is located upstream in the watershed.

The amount of total nitrogen in the effluent from MBR and Biolac is estimated to be approximately < 3.0 and < 10.0 mg/l respectively.

Based on these parameters, the amount of total nitrogen in the mixed waters with effluent from MBR and Biolac is estimated to be approximately 1.07 and 1.25 mg/l respectively for year-round discharge and 1.05 and 1.17 mg/l for winter-only discharge (Appendix H).The water quality criteria for total nitrogen for surface waters is not available from WAC 173-201A (Nov. 2006), National Toxics Rule (40 CFR 131.36), EPA National Recommended Water Quality Criteria: 2002 (EPA 822-R-02-47), or WAC 173-200-040. Hence, the water quality criteria for total nitrogen could be estimated as a sum of the water quality criteria for total ammonia-nitrogen and nitrite+nitrate-nitrogen. Based on this assumption, the chronic total nitrogen criteria are estimated to be 10.5 and 10.82 mg/l for winter discharge and year round discharge respectively. Based on these criteria, the wastewater treatment plant's effluent water quality could potentially meet this water quality standard for total nitrogen for both year-round and winter-only discharge.

#### 9.6.3.7 Dissolved Oxygen

The dissolved oxygen (D.O.) demand is assessed based on two separate parameters. First, the D.O. impact on the receiving stream was analyzed due to oxygen depleting chemicals in the effluent using the Streeter Phelps model. Secondly, the D.O. impacts due to nutrients should be considered.

The Streeter Phelps model requires the wastewater effluent characteristics and receiving water characteristics as inputs as shown in Table 9-11 and 9-12. D.O. is consumed (reduced) through

the secondary treatment process, but increased through weirs or any kind of water cascade that will add D.O. Typical D.O setpoints in aerobic treatment processes are sufficient to maintain a reasonable level of D.O. in the treated effluent; however it is difficult to estimate the potential effluent D.O concentration from either the MBR or Biolac processes. Therefore, in order to establish the minimum required D.O. to avoid impairment of the downstream surface water quality, an analysis was conducted assuming that the dissolved oxygen in the wastewater effluent is 0 mg/l.

For the receiving water characteristics, the upstream discharge is estimated to be the lowest 7-day average flow during 2005 – 2009 which was 28.3 CFS for year-round discharge and 57.2 CFS for winter-only discharge. However, only 75% of the 7Q10 flow is used for the receiving waters, as the proposed discharge location is located upstream in the watershed.

The upstream carbonaceous 5 day biological oxygen demand (CBOD5) and nitrogenous 5-day biological oxygen demand (NBOD5) are assumed to have typical values of 1.0 and 0.1 mg/l, respectively. The upstream dissolved oxygen was estimated as a function of atmospheric pressure and temperate (Metcalf and Eddy, 2003). The maximum temperature at East Fork Lewis River at Dollars Corner was 26.4 $^{o}$C and 15.4$^{o}$C during year-round and winter-only time period. The channel slope is estimated as a function of the difference in elevation between the station at Dollars Corner (ID 27D090) and the station at Lewis River at Woodland at I-5 (ID 27C070) and the distance between them (45,321 ft). The channel depth is assumed to be within the range of 5 - 6 ft. The channel velocity is estimated based on the upstream discharge (during year-round and winter-only flow values) and an assumed channel width of 15 ft.

**Table 9-11: Wastewater Treatment Plant Effluent Characteristics-Streeter Phelps**

| | Biolac | MBR |
|---|---|---|
| Discharge (CFS): | 0.56 (year-round)/ 0.75 (winter-only) | 0.56 (year-round)/ 0.75 (winter-only) |
| CBOD5 (mg/l): | 10 | 3 |
| NBOD5 (mg/l): | 10 | 3 |
| Dissolved Oxygen (mg/l): | 0 | 0 |
| Temperature ($^{o}$C): | 20 | 20 |

**Table 9-12: Receiving Water (East Fork Lewis River) Characteristics**

| | |
|---|---|
| Upstream Discharge (CFS): | 21.2 (year-round)/ 42.9 (winter-only) |
| Upstream CBOD5 (mg/l): | 1.0 |
| Upstream NBOD (mg/l): | 0.1 |
| Upstream Dissolved Oxygen (mg/l): | 9.99 |
| Upstream Temperature (deg C): | 26.4 (year-round)/ 15.6 (winter-only) |
| Elevation (ft NGVD): | 68 |
| Downstream Average Channel Slope (ft/ft): | 0.00128 |
| Downstream Average Channel Depth (ft): | 5.5 |
| Downstream Average Channel Velocity (fps): | 0.26 (year-round)/ 0.52 (winter-only) |

The Ecology Streeter-Phelps model suggests the reaeration rate at 20 $^{o}$C should be assumed to be 0.18 and 0.36 day-1 for year-round and winter-discharge respectively. The model also recommends a BOD decay rate of 2.28 and 1.62 day-1 for year-round and wet weather-discharge respectively.

Based on these inputs, the critical D.O. concentration for the mixed water with the MBR effluent is 6.2 and 8.6 mg/l for year-round and winter-only discharge respectively. The critical D.O. concentration for the mixed water with the Biolac effluent is 5.8 and 8.8 mg/l for year-round and winter-only discharge respectively. The travel time to critical D.O. concentration for the mixed water with the MBR effluent is 0.85 and 1.36 days for year-round and winter-only discharge respectively. The travel time to critical D.O. concentration for the mixed water with the Biolac effluent is 0.87 and 1.37 days for year-round and winter-only discharge respectively. The distance to critical D.O. concentration for the mixed water with the MBR effluent is 3.58 and 11.56 miles for year-round and winter-only discharge respectively. The distance to critical D.O. concentration for the mixed water with the Biolac effluent is 3.65 and 11.64 miles for year-round and winter-only discharge respectively. The critical D.O. deficit for the mixed water with the MBR effluent is 1.88 and 1.15 mg/l for year-round and winter-only discharge respectively. The critical D.O. deficit for the mixed water with the Biolac effluent is 2.24 and 1.34 mg/l for year-round and winter-only discharge respectively. The Streeter Phelps model spreadsheets for both MBR and Biolac for year-round and winter-only discharges are provided in Appendix H

Based on this analysis, maintaining an effluent D.O concentration greater than 2.24 would mitigate the potential for a D.O. deficit in the receiving stream. The absolute minimum D.O. concentration typically allowed in an aerobic activated sludge treatment process is 2.0 mg/l, with lower D.O. concentrations leading to anoxic or anaerobic conditions in portions of the mixed liquor floc. Therefore, typical D.O. concentrations are often between 3 mg/l and 5 mg/l. The treatment processes under consideration can easily maintain an effluent D.O. concentration greater than 2.24 mg/l. Based on this analysis, the wastewater treatment plant's effluent water quality could potentially meet this water quality standard for dissolved oxygen.

#### 9.6.3.8 Summary of Mixed Water – Water Quality Parameters

Table 9-13 summarizes the water quality parameters in the mixed waters as a result of both treatment processes, MBR and Biolac, for year-round and winter-only chronic/acute discharge conditions. Detailed calculations of the mixed water's water quality parameters are listed in Appendix H. The water quality criteria for each parameter are also listed in Table 9-14 and included in Appendix H.

**Table 9-13: Mixed Water – Water Quality Parameters**

| MBR + Mixed Water Water Quality Parameters | Units | Chronic - Year Round | Chronic - Winter Discharge | Acute - Year Round | Acute - Winter Discharge |
|---|---|---|---|---|---|
| $NH4^{+}$-N at chronic/acute mixing zone | mg/l | 0.14 | 0.14 | 0.57 | 0.59 |
| Unionized NH3 at chronic/acute mixing zone | mg/l | 0.0023 | 0.009 | 0.0067 | 0.0036 |
| NO2+NO3-N at fully mixed zone | mg/l | 0.734 | 0.729 | - | - |
| Total nitrogen at fully mixed zone | mg/l | 1.07 | 1.05 | | |

| MBR + Mixed Water<br>Water Quality Parameters | Units | Chronic - Year Round | Chronic - Winter Discharge | Acute - Year Round | Acute - Winter Discharge |
|---|---|---|---|---|---|
| Total phosphorus at fully mixed zone | mg/l | 0.038 | 0.034 | - | - |
| pH at chronic/acute mixing zone | | 8.08 | 8.19 | 7.37 | 7.44 |
| Temperature at chronic/acute mixing zone | $^{o}$C | *26.27* | 15.7 | *25.47* | 17.99 |
| Total nitrogen at fully mixed zone | mg/l | 1.07 | 1.05 | - | - |
| **Biolac + Mixed Water**<br>**Water Quality Parameters** | | | | | |
| NH4+-N at chronic/acute mixing zone | mg/l | 0.14 | 0.14 | 0.57 | 0.59 |
| Unionized NH3 at chronic/acute mixing zone | mgNH3/l | 0.0023 | 0.009 | 0.0067 | 0.0036 |
| NO2+NO3-N at fully mixed zone | mg/l | 0.817 | 0.785 | - | - |
| Total Nitrogen at fully mixed zone | mg/l | 1.25 | 1.17 | - | - |
| Total phosphorus at fully mixed zone | mg/l | 0.218 | 0.154 | - | - |
| pH at chronic/acute mixing zone | | 8.08 | 8.19 | 7.37 | 7.44 |
| Temperature at chronic/acute mixing zone | oC | 26.27 | 15.7 | 25.47 | 17.99 |

**Note:**
**Numbers in italics do not meet water quality criteria*

Table 9-14 summaries the list of criteria used for analysis of water quality parameters in mixed waters. The source and assumptions used in obtaining the criteria are detailed in sections above which provide each water quality parameter separately.

**Table 9-14: Criteria for Water Quality Parameters**

| Water Quality Criteria | Units | Chronic - Year Round | Chronic - Winter Discharge | Acute - Year Round | Acute - Winter Discharge |
|---|---|---|---|---|---|
| Total ammonia$^{+}$-N at chronic mixing zone | mg/l | 0.39 | 2.02 | 13.3 | 13.3 |
| Unionized NH3 at edge of mixing zone[a] | mgNH3-N/l | 0.042 | 0.022 | 0.298 | 0.172 |
| NO2+NO3-N at fully mixed zone | mg/l | < 10 | < 10 | - | - |
| Total phosphorus at fully mixed zone | mg/l | 0.1 - 1.0 [b] | 0.1 - 1.0 [b] | - | - |
| pH at chronic mixing zone | units | 6.5 - 8.5 | 6.5 - 8.5 | 6.5 - 8.6 | 6.5 - 8.7 |
| Temperature at chronic mixing zone | $^{o}$C | 16 - 17.5 | 16 - 17.5 | 33 | 33 |
| Total Nitrogen at fully mixed zone | mg/l | < 10.5 [c] | < 10.82 [c] | - | - |

**Notes:**
a. Acute criteria based on mixing under acute conditions; chronic criteria bases on mixing under chronic conditions. See Table 9-15
b. Anticipated water quality criteria
c. Estimates

Based on the Table 9-13 and 9-14, for both MBR and Biolac effluent, all water quality parameters of the mixed waters appear to meet the water quality criteria standard, except for the anticipated dry-weather temperature under chronic condition associated with year-round discharge. The background year-round temperature for the receiving waters is 26.4$^{o}$C. Even though the temperature of the mixed water exceeds 16$^{o}$C for both MBR and Biolac effluent, it does not cause an increase in the background stream temperature of more than 0.3$^{o}$C.

As a part of the facility plan, additional data from the proposed discharge site will be obtained to confirm assumptions used in this analysis and determine the water quality parameters in the mixed waters. These values are based strictly on monitoring and will be re-evaluated during the Facility Planning process to determine the actual values based on samples taken.

#### 9.6.3.9 Estimates of Mixing Zones and End-of-Pipe Effluent Limits

Two potential direct discharge locations were initially considered: Big Tree Creek near the confluence with Yacolt Creek, and The East Fork of the Lewis River just downstream of the confluence with Big Tree Creek. During our field evaluation of these locations, and subsequent estimations of critical low flows, it became apparent that the Big Tree Creek critical flow (under 10 CFS total flow x 25% = 2.5 CFS) would be insufficient to provide mixing to meet aquatic toxicity, temperature, and human health standards. Therefore, our mixing evaluation focused solely on the proposed discharge to the East Fork of the Lewis River below the Big Tree Creek confluence.

Kennedy/Jenks estimated the potential mixing and end of pipe effluent limits for parameters of concern, including temperature, ammonia, and metals, under approximated acute, chronic, and human health based critical conditions. These estimates are based on Washington Department of Ecology mixing and permit writer guidance and regulations.

#### 9.6.3.10 Receiving Flows

Our estimates of receiving water flows are based on the last three years of flow data from the Dollar Corner Station (ID # 27D090) on the East Fork of the Lewis River, located approximately 10 miles (direct) 15 miles (estimated river length) downstream of the proposed discharge location. The flows were estimated for year-round and winter-only (1 October through 31 March) discharges. The lowest one-day flow from the data periods of interest were used to estimate the 1Q10 acute flow; the lowest 7-day rolling averages for the discharge periods were used to estimate the 7Q10 chronic flow, and the averages for the discharge periods were used for human health based flows. Because the proposed discharge location is located upstream in the watershed, 75 percent of the critical flows were used for the mixing calculations.

#### 9.6.3.11 Effluent Flows and Mixing Estimation

Because the proposed treatment plant has not been constructed, there is no historical flow data from which to determine peak wet weather, average wet weather, and long term harmonic mean discharge rates needed to assess potential mixing and calculate estimated end-of-pipe limits. Therefore, peaking factors for the periods of potential discharge were applied to the dry weather design flow to estimate these critical effluent flows.

Because there is no outfall design to model, conservative estimates of the mixing were used, with restraints of allowable mixing volumes as set in WAC 173-201A-400. A mixing volume of 2.5 percent of the adjusted critical flow was used to estimate acute conditions, and 25 percent of the flow was used for the chronic and human health conditions. These estimates are reasonable if a suitable diffuser outfall is constructed and given the rapid mixing induced by the falls and cataracts immediately downstream of the proposed discharge location.

The base flows, corrections, and mixing assumptions needed to develop dilution factors for end-of-pipe limits are summarized on Table 9-15 below.

**Table 9-15: Flow Values and Assumptions for Critical Condition Mixing Estimates**

| | Year-Round | | Winter Only | |
|---|---|---|---|---|
| **Receiving Water** | **Value** | **Unit** | **Value** | **Unit** |
| 1Q10 estimate at Dollar Corner | 26 | CFS | 39 | CFS |
| 7Q10 estimate at Dollar Corner | 28 | CFS | 57 | CFS |
| Average at Dollar Corner | 743 | CFS | 1120 | CFS |
| Adjustment Factor for upstream discharge | 75 | Percent | 75 | Percent |
| Percent mixing - acute | 2.5 | Percent | 2.5 | Percent |
| Percent mixing - chronic | 25 | Percent | 25 | Percent |
| Acute flow available for mixing at discharge | 0.5 | CFS | 0.7 | CFS |
| Chronic flow available for mixing at discharge | 5.3 | CFS | 10.7 | CFS |
| Human Health flow at discharge | 557 | CFS | 840 | CFS |
| **Effluent** | | | | |
| Design Dry Flow | 0.373 | CFS | 0.373 | |
| Wet weather peaking factor | 250 | Percent | 250 | Percent |
| Highest monthly average factor | 150 | Percent | 200 | Percent |
| Human Health mean factor | 80 | Percent | 90 | Percent |
| Estimated Peak Flow (acute) | 0.9325 | CFS | 0.9325 | CFS |
| Estimated monthly average peak (chronic) | 0.5595 | CFS | 0.746 | CFS |
| Estimated mean flow (human health) | 0.2984 | CFS | 0.3357 | CFS |
| **Dilution Factors** | | | | |
| Acute Dilution Factor | 1.9 | | 1.8 | |
| Chronic Dilution Factor | 12.5 | | 15.1 | |
| Human Health Dilution Factor | 1859 | | 2546 | |

### 9.6.3.12 End of Pipe Limit Estimation

To estimate potential end of pipe limits for metals, available receiving water data from the Dollar Corner station was used where available, or assumed based on analytical detection limits (for silver, mercury and nickel). A hardness of 50 mg/l was assumed to set metals standards, and end of pipe limits were estimated using mass balance equation and critical flows described above. The estimates of the limits, including mixing but no metals translators, are summarized on Table 9-16 below. As part of the Facility Plan, receiving water metals data will be collected to provide actual background data. Additional sampling will be discussed later in this chapter.

**Table 9-16: Estimated End of Pipe Limits for Metals**

| | Metals Concentrations | | | Applicable Standards | | Year Round End of Pipe Limits | | Winter Only End of Pipe Limits | |
|---|---|---|---|---|---|---|---|---|---|
| **Constituent** | **Dollar Corner Receiving Water (dissolved)** | **Dollar Corner Receiving Water DL/2** | **Assumed Effluent (total)** | **Acute** | **Chronic** | **Acute** | **Chronic** | **Acute** | **Chronic** |
| Silver, in mg/l | *<0.02* | 0.01 | <0.001 | 0.00105 | --- | Over | --- | Over | -- |
| Chromium, in mg/l | <0.02 | 0.01 | 0.0009 | 0.311 | 0.1 | 0.46 | 0.95 | 0.54 | 0.17 |
| Copper, in mg/l | <0.002 | 0.001 | 0.0064 | 0.0089 | 0.0063 | 0.013 | 0.057 | 0.015 | 0.01 |
| Lead, in mg/l | <0.002 | 0.001 | 0.0003 | 0.03 | 0.0012 | 0.045 | 0.0031 | 0.052 | 0.0014 |
| Mercury, in mg/l | *<0.00008* | 0.00004 | <0.00008 | 0.0021 | 0.000012 | 0.003 | Over | 0.004 | Over |
| Nickel, in mg/l | *<0.02* | 0.01 | 0.0033 | 0.787 | 0.087 | 1.18 | 0.82 | 1.39 | 0.15 |
| Zinc, in mg/l | 0.03 | 0.03 | 0.038 | 0.064 | 0.058 | 0.08 | 0.32 | 0.09 | 0.08 |

**Notes:**
Metals standards assume hardness = 50 mg/l
*Assumed values, no data available. One half of the detection limit was used for this parameter*
"Over" indicates assumed receiving water concentration already over the standard
For non-detect values, one half the detection limit was used

### 9.6.3.13 Impacts to Dissolved Oxygen Due to Nutrients

Nutrient loading from an effluent discharge to the East Fork of the Lewis River, particularly limiting nutrients total nitrogen and total phosphorus, could also have an impact on dissolved oxygen and pH. Stimulation of periphyton and suspended algae could result in diel and end of season swings in D.O. and pH. However, there is currently insufficient information on background nutrients and flows at the proposed discharge location to model these potential effects at this time. As part of the proposed sampling plan for the Facility Plan, flow, temperature and nutrient (ammonia, nitrate, nitrite, TKN, total and dissolved orthophosphate) data will be collected. These data could be used in a steady state model such as QUAL2Kw to estimate nutrient impacts.

In the interim, mass loading estimates for the two proposed treatment methods (including filtration and chemical treatment for Biolac to remove phosphorus) were made for comparison to the total system loading, using nutrient data from the Dollars Corner station. This is a conservative estimate because it includes non-point loading from agricultural and urban areas downstream of the proposed point of discharge. A summary of the percent increase in nutrient loading is summarized in Table 9-17 below.

As the table indicates, there is potential for increases in total phosphorus and nitrogen loading as a result of the discharge. Modeling using QUAL2Kw will be needed during the Facility Plan development to assess how the nutrient load increases may impact dissolved oxygen, pH, and overall river health.

**Table 9-17: Yacolt Nutrient Load Estimates - Total System Loading With Filtration and Chemical Treatment**

| | | | |
|---|---|---|---|
| **Flows** | | | |
| Year-Round Annual Average Effluent Flow | 0.249 | MGD | |
| Wet weather Effluent Flow | 0.271 | MGD | |
| Year-Round Critical (7Q10 estimate) Receiving Flow | 21 | CFS | |
| Wet weather Critical (7Q10 estimate) Receiving Flow | 42.8 | CFS | |
| **Biolac - Year Round** | | | |
| **Parameter** | **Effluent Concentration (mg/l)** | **Effluent Average Load (kg/day)** | **Effluent Average Load (lb/day)** |
| Total P (full treatment) | 0.10 | 0.09 | 0.21 |
| Nitrite + Nitrate N | 4.50 | 4.24 | 9.35 |
| TKN | 10.00 | 9.43 | 20.78 |
| Total N | 14.50 | 13.67 | 30.14 |

**Biolac - Winter**

| Parameter | Effluent Concentration (mg/l) | Effluent Average Load (kg/day) | Effluent Average Load (lb/day) |
|---|---|---|---|
| Total P (full treatment) | 0.10 | 0.10 | 0.23 |
| Nitrite + Nitrate N | 4.50 | 4.62 | 10.18 |
| TKN | 10.00 | 10.26 | 22.62 |
| Total N | 14.50 | 14.88 | 32.80 |

**MBR - Year Round**

| Parameter | | | |
|---|---|---|---|
| Total P | 0.50 | 0.47 | 1.04 |
| Nitrite + Nitrate N | 1.25 | 1.18 | 2.60 |
| TKN | 3.00 | 2.83 | 6.24 |
| Total N | 4.25 | 4.01 | 8.83 |

**MBR - Winter**

| Parameter | | | |
|---|---|---|---|
| Total P | 0.50 | 0.51 | 1.13 |
| Nitrite + Nitrate N | 1.25 | 1.28 | 2.83 |
| TKN | 3.00 | 3.08 | 6.79 |
| Total N | 4.25 | 4.36 | 9.61 |

**Receiving Water Loads Year Round**

| Parameter | Receiving Concentration (mg/l) | Receiving Average Load (kg/day) | Receiving Average Load (lb/day) | Biolac Effluent Load (kg/day) | MBR Effluent Load (kg/day) |
|---|---|---|---|---|---|
| Total P | 0.003 | 0.14 | 0.31 | 0.09 | 0.47 |
| Nitrite + Nitrate N | 0.390 | 20.07 | 44 | 4.24 | 1.18 |
| Ammonia-N | 0.019 | 0.97 | 2.1 | 9.43 | 2.83 |
| Total N | 0.409 | 21.03 | 46 | 13.67 | 4.01 |

**Receiving Water Loads Winter Only**

| Parameter | | | | | |
|---|---|---|---|---|---|
| Total P | 0.003 | 0.29 | 0.64 | 0.10 | 1.28 |
| Nitrite + Nitrate N | 0.390 | 40.85 | 90 | 4.62 | 3.08 |
| TKN | 0.019 | 1.97 | 4.3 | 10.26 | 4.36 |
| Total N | 0.409 | 42.82 | 94 | 14.88 | 0.00 |

**Notes:**

Effluent flow is average of 9 months at dry flow (0.241 MGD) plus 3 months at wet weather flow (0.271 MGD)
Receiving flows are estimates of 7Q10 based on 75% of Dollars Corner Low Flows

## 9.7 Anti-Degradation

Washington State's anti-degradation policy is guided by chapter 90.48 of the Revised Code of Washington (RCW), Water Pollution Control Act, chapter 90.54 RCW, Water Resources Act of 1971, and 40 Code of Federal Regulations (CFR) 131.12. As defined in Washington Administrative Code (WAC) 173-201A-300, the purpose of the anti-degradation policy is to: "1)

restore and maintain the highest possible quality of the surface waters of Washington; 2) describe situations under which water quality may be lowered from its current condition; 3) apply to human activities that are likely to have an impact on the water quality of a surface water; 4) ensure that all human activities that are likely to contribute to a lowering of water quality, at a minimum, apply all known, available, and reasonable methods of prevention, control, and treatment (AKART); and 5) apply three levels of protection for surface waters of the state."

The anti-degradation rules apply by water body and parameter, with three levels of protection: Tiers I, II, and III. Yacolt's proposed surface water discharge is applicable to Tiers I and II only.

### 9.7.1 Tier I Protection

Tier I is used to ensure existing and designated uses are maintained and protected and applies to all waters and all sources of pollution. No degradation may be allowed that would interfere with, or become injurious to, existing or designated uses, except as provided for in WAC-173-201A. For waters that do not meet assigned criteria, or protect existing or designated uses, Ecology will take appropriate and definitive steps to bring the water quality back into compliance with the water quality standards. Whenever the natural conditions of a water body are of a lower quality than the assigned criteria, the natural conditions constitute the water quality criteria. Where water quality criteria are not met because of natural conditions, human actions are not allowed to further lower the water quality, except where explicitly allowed in WAC-173-201A.

The East Fork Lewis River is subject to Tier I protection as numerous reaches do not meet water quality standards for in-stream temperature and fecal coliform bacteria and, therefore, is listed under section 303(d) of the Clean Water Act. Several tributaries to the East Fork Lewis River within the Yacolt area are also on the 303(d) list. Yacolt Creek has one reach listed for fecal coliform, and Big Tree Creek has one reach listed for temperature. Weaver Creek has one reach listed for pH.

#### 9.7.1.1 Applicability

A Total Maximum Daily Load (TMDL) is under development to improve the water quality in the East Fork Lewis River for fecal coliform and temperature. Yacolt will receive a waste load allocation (WLA) for fecal coliform bacteria and temperature in their NPDES permit as a result of the TMDL process, in which the Town will participate.

Under Tier I protection, the proposed discharge must meet in-stream temperature and fecal coliform water quality standards until the TMDL process is completed. Both the Biolac and MBR treatment processes can meet the water quality standard for fecal coliform. As stated in the section entitled "Surface Water – Direct Discharge", the background year-round temperature (26.4°C) in the East Fork Lewis River exceeds the water quality standard for Core Summer Salmonid Habitat (16°C). Based on preliminary analysis, neither the Biolac nor MBR proposed discharge should cause a measurable increase in stream temperature greater than 0.3°C. Prior to receiving its WLA, the Town will collect more site-specific background water quality data during Facility Planning in order to model the potential for adverse impacts from its proposed surface water discharge to river temperature and fecal coliform.

### 9.7.2 Tier II Protection

Tier II is used to ensure that water bodies meeting water quality standards in WAC 173-201A are not degraded, unless such lowering of water quality is necessary and in the overriding public interest. Tier II applies only to a specific list of polluting activities, including wastewater discharge under an NPDES permit. Therefore, for constituents other than fecal coliform and temperature, the proposed discharge may not cause a “measurable change” lowering the water quality at the edge of the regulatory mixing zone, unless it is “necessary and in the overriding public interest.”

#### 9.7.2.1 Applicability

Under WAC 173-201A-320(3), a “measurable change” includes: a DO decrease of 0.2 mg/l or greater; pH change of 0.1 units or greater; turbidity increase of 0.5 NTU or greater; or any detectable increase in the concentration of a toxic or radioactive substance. According to preliminary analysis of the proposed effluent quality, Yacolt’s proposed discharge will meet water quality standards for these parameters, thus no further analysis will be required to determine if the water quality degradation is “necessary and in the overriding public interest”.

#### 9.7.2.2 Costs

A discharge to the East Fork will be approximately 12,500 from the south edge of the existing town limits. Actual sizing has not been performed at this time but construction estimates for a 15-inch gravity pipe were used. If a pump station is necessary, the pipe prices would decrease since the treated effluent would be conveyed in a smaller, shallower pressure main. The pipe alignment is assumed to be in existing public rights-of-way (Railroad Avenue). Pricing includes asphalt replacement. The pump station would be co-located with the plant to provide access to support systems (power, SCADA, etc.) and to minimize additional site improvements. The total cost includes engineering, legal, and administrative costs estimated at 30% of the construction cost.

**Table 9.18. Surface Discharge Option - Costs**

| System | Length | Cost/Unit | Subtotal | Diffuser | Total |
|---|---|---|---|---|---|
| Gravity | 12,500 | $150/ft | $1,875,000 | $300,000 | $2,827,500 |
| Pressure* | 12,500 | $50/ft | $612,500 | $300,000 | $2,161,250 |
| *Pump station | | $750,000 | $1,362,500 | | |

**Note:**
* Pressure main total includes pump station costs

While the gravity installation costs will be marginally higher, operational costs for the gravity installation will be minimal compared to the pump station installation. Both options will be reviewed during the actual design phase. Engineering and other costs are estimated at 30% added to the total system cost.

#### 9.7.2.3 Surface Water Sampling Program

During the process of developing the General Sewer Plan, several gaps in background water quality data for the proposed discharge location on the East Fork of the Lewis River were identified. As a result, a sampling program will be completed as a part of the Facility Plan

development to access the impacts of the wastewater treatment plant discharge at the East Fork of the Lewis River. The proposed discharge location will be located at approximately river mile 26 on the East Fork of the Lewis River.

In order to further assess the potential for year-round versus winter-only discharge, data will be collected during the winter -weather season and the summer dry-weather months with specific focus on the shoulder periods of April-May and September-October. Background assessment of water quality parameters including temperature (using a recording temperature probe) , and discrete measurements/samples pH, dissolved oxygen, total phosphorus, total nitrogen, total ammonia as nitrogen, nitrite, nitrate, ammonia (calculated as un-ionized fraction) , and metals including copper, lead, zinc, and mercury will be performed. The sampling of metals will be performed using ultra-clean methodology and for all parameters up to three samples will be obtained under each critical condition (summer low flow and $NH4^{+}$-N low flow). In addition, a study of receiving water flow will be conducted during both wet weather and summer months.

The water quality parameters will be sampled and flow will be monitored during the periods of interest and they will be spaced at least two weeks apart. If year round discharge is still a consideration, sampling will occur up to 3 times in summer and 3 times in $NH4^{+}$-N. The sampling location for the water quality parameters and flow is at approximate river mile 26 on the East Fork of the Lewis River.

#### 9.7.2.4 Temperature Compliance - Cooling Towers/Chillers

Temperature compliance for the wastewater treatment plant discharging to the EFLR with salmonid rearing and migration is a potential issue. A cooling tower combined with chillers has been evaluated as an alternative for reducing wastewater treatment plant effluent temperature and to determine the level of impact that could be acquired.

Cooling towers operate by circulating recycled water through a counter-flowing stream of cool ambient air to cool effluent through passive evaporation. Cooling towers are packed with aeration media that spreads flowing water into thin sheets to maximize the surface area contact between water and air so that as much evaporative cooling can take place in the shortest length of time possible. Heat leaves the system in the form of water vapor.

Cooling in cooling towers is a function of the ambient “wet bulb” temperature (a measure of the evaporative capacity of air flowing through the cooling towers). The temperature of treated effluent entering the cooling tower is approximately at 77°F/25°C and the “target” temperature is 60.8$^{o}$F/16$^{o}$C. However, the achievable target temperatures are often close to the ambient wet-bulb temperature. Based on inputs from Trane Cooling Systems, cooling tower capabilities can effectively bring effluent temperature to within 4 or 5$^{0}$F of the wet bulb temperature.

During the summer, the wet bulb temperature in the Vancouver area is 68 degrees. Assuming, the Town of Yacolt has the wet bulb temperature in the similar range, the lowest temperature that could be attained with a cooling tower during the worst part of the summer is in the range of 72-73$^{o}$F. Because the temperature requirement of the discharge is 60.8$^{o}$F, a chiller with a heat exchanger would be necessary to meet the temperature requirements during the summer. During cooler times of the year, the treated effluent meets the requirements for temperature at discharge without needing any additional cooling.

Based on preliminary budget quotes from Trane Cooling Systems, the planning level capital cost including contractor mark ups for a combined cooling tower/chiller system is estimated to be $1.2 million. The contractor mark ups include 5% for mobilization, 15% for overhead and profit, 8.2% for sales tax, 25% for engineering legal and administration, and 25% for contingencies. Detailed cost estimates are presented in Appendix F. The O&M costs for a cooling tower/chiller system is estimated to be approximately $39,000 per year and includes system maintenance, labor, and electrical costs. The O&M costs are estimated based on operating the cooling towers/chillers during the summer months of April through September. The 20 year present worth operating and maintenance cost is $1,600,000, with a total present worth cost of $2,800,000.

## 9.8 Indirect Discharge to Surface Water

In the Yacolt Valley there are a number of possibilities to make use of indirect discharge of treated effluent. The East Fork of the Lewis River lies just south of the valley and three creeks flow through the valley and discharge to the East Fork.

In addition, Cedar Creek, at the north end of the valley, drains northwest to the North Fork of the Lewis River.

Either of these surface water bodies (North Fork or East Fork of the Lewis River) has capacity to accept additional flows. The design flows projected for Yacolt (0.15 mgd = 0.23 cfs; 1.27 mgd = 2 cfs) are small in comparison to mean annual surface water flows in these two rivers. Based on five years of recent flow data from Clark Public Utilities monitoring station EF-9, mean daily flows within Yacolt Creek range from a low of 1 cfs to a high of 265 cfs. Ecology flow monitoring data from 1994-1998 in Cedar Creek near Etna range from 10 to 270 cfs. However, the ground conditions at the East Fork location do not lend themselves to an indirect discharge due to the large amount of bedrock and discharging to the North Fork would require a longer transmission line, pump station and is less desirable by the recreational community. Consequently, this option of discharge will not be pursued.

Figure 6 summarizes the initial reconnaissance evaluations of potential indirect discharge locations in the Yacolt Valley.

## 9.9 Pipeline to a Remote Treatment Facility

Partially treated or untreated effluent could be pumped to another location for treatment and discharge. While this would save direct treatment costs, it would result in the need for a pump station, pressure main and a willing partner to accept the flow. The closest possible discharge point would be the City of Battle Ground. Pumping would be approximately 14 miles with a crossing of the East Fork of the Lewis River required. This alternative, discussed in the Treatment Chapter (8) is very expensive and does not accomplish the environmental objective of maintaining or increasing water flows higher in the Lewis River watershed.

## 9.10 Summary and Recommendations

Based on available information, it appears that a direct discharge to ground and a surface discharge to the East Fork of the Lewis River are two viable alternatives for discharge of treated effluent. The selected alternative at this time is a year round ground discharge at the Hoag Street

location on the south side of town (Figure 6). Using either a Biolac system or MBR, the water quality parameters can be met.

Secondary options that will be further reviewed and sampled for compatibility include the “Church Property” (Figure 6) and a surface water discharge at the East Fork of the Lewis River (Figure 5). The surface water discharge (EFLR) will meet the water quality criteria for the required parameters so Ecology can establish temperature BMP’s rather then standards with the initial permit development. Recognizing that the EFLR is currently impaired for temperature and does not have a TMDL in place, the discharge will comply with the water quality criteria for temperature.

There are several other options that were considered but are not recommended for further study. Indirect subsurface discharge to surface water is not supported by Ecology because of the small size of receiving surface water bodies in the local area or is not advisable due to adjacent stream conditions.

The effluent discharge analysis was completed using data that represents conditions believed to be similar to those of the proposed groundwater and surface water discharge sites, but not data collected from the specific sites themselves. The next step in the effluent discharge evaluation is to gather additional data from the proposed discharge sites to confirm assumptions used in this analysis and determine the most suitable discharge site. Regardless of the selected discharge option, the Town will remain engaged in the East Fork TMDL development. This will allow the town to monitor data collection and evaluation and to promote the establishment of long-term policies that support both the Town’s growth and the long-term protection of environmental resources in the Yacolt Valley.

Additional sampling and testing as described in the Additional Site Investigation for Facility Planning-Groundwater Discharge and the Surface Water Sampling Program sections will be performed during the Facility Planning process and a final recommendation will be provided based on these results.

It may be necessary to use a combination of the two discharge options; however, on the basis of costs, this analysis will be done only if neither option is feasible as a year round alternative.

# Section 10: Capital Improvement Plan

Yacolt will have a phased Capital Plan for the process of constructing sanitary sewer service. With their current septic plan in place and underway, the next step will be planning, design and construction for a sewer system. The phases, costs, and schedule for completing work associated with implementing a new sewer system are described below. A summary of the CIP costs and phasing is provided in Table 10-1.

## 10.1 Phase 1 – Completion of tank monitoring

Yacolt with assistance from Clark Public Utilities and through new growth requirements was able to install septic tank riser inspection ports on approximately 385 of the existing and new tanks. Yacolt anticipates the adoption of an Ordinance requiring participation (with the more stringent monitoring criteria for septics) of all residences within the UGA) The cost involvement by the Town is unknown at this time but it would be anticipated that this would be a phased process over two years paid for by the property owners. This work is completed.

## 10.2 Phase 2 – Creation of a Citizens Advisory Committee

Yacolt has created a Citizens Advisory Committee to discuss sanitary sewer development as well as overall Town development, both short term and long term. This group will provide a recommendation to the Town Council regarding both the sewer provision as well as timing. The Citizen Advisory Committee began meeting in 2009, and has held 3 meetings. They will continue to provide input to the Town Council through completion of the Facility Plan. The estimated cost to the Town is $7,500, which will be met using State funds or other funds.

## 10.3 Phase 3 - Development of Facility Plan

During the Ecology approval process of the General Sewer Plan, Yacolt will begin to develop a Facility Plan for review and approval by Ecology. During this time, Yacolt will also develop its funding plan and begin creating applications for funding commitment. This work is scheduled to be completed between 2009 and 2011, at an estimated cost of $ 400,000. Funding for this work has been provided through a Department of Ecology grant administered by the Clark Regional Wastewater District.

## 10.4 Phase 4 – Purchase of Plant Site

In conjunction with the Facility Plan development, Yacolt will locate and purchase an appropriate plant site that will offer adequate space to provide treatment for the entire valley (50-year timeframe). Purchase of the plant site is anticipated to occur in 2010-2011. The estimated cost to the Town is $150,000. Funding for the site purchase is anticipated to be through grants, loans, or System Development Charges (SDCs).

## 10.5 Phase 5 – Plans, Specifications, and Estimate Preparation

It is anticipated that the plan preparation for the collection system will include a parcel by parcel review of the existing conditions. In addition, as alternate systems (STEP or Vacuum) require public ownership, it will be necessary to obtain easements, permits and other legal documents from each property owner. This work is both time consuming and possibly labor intensive. Costs for this work are estimated at ~$300,000.

During negotiation and purchase of a plant site, construction plans and specifications will be developed for the projects. This work is anticipated to occur in 2012, with an estimated cost of $1,545,000. Permitting costs will be dependant on discharge location; $ 1 million will be added at this time as a place holder. Funding for the project will be through grants, loans, or SDCs.

## 10.6 Phase 6 - Plant Construction

Following the design of improvements, Yacolt will begin construction of a new treatment plant appropriate for the Town's 20 year growth. New development will install public improvements in conjunction with any development plans. Construction is expected to begin in 2013, with an estimated cost of $12,892,000. For funding purposes at this time the total cost of both discharge options (groundwater and surface water) has been included in the construction costs. Treatment costs are currently based on the higher cost (MBR) alternative. Funding for the project will be through grants, loans, bond sales, or SDCs.

## 10.7 Phase 7 – Collection System Construction

Yacolt will issue contracts for construction of the collection system improvements to correspond with the completion of the treatment facility. Construction of the collection system is anticipated to occur in 2014, with an estimated cost of $8,407,000 using the vacuum system estimates. Funding for the project will be through grants, loans, bond sales, or SDCs.

## 10.8 Schedule

The schedule for capital improvements described above will be governed by the availability of financing. The Capital Plan provided is a best case scenario whereby Plan approvals are secured, funding is readily available, and the citizenry is eager to move forward with the projects. Any delay in this schedule will result in higher construction costs and possible higher permitting efforts and costs.

## 10.9 Funding

Yacolt will be looking at all available funding/financing options. These will include private funding through developer extensions, user fees and charges as well as public funding through bonds, loans and grants. Funding is discussed further in Chapter 11 – Financing.

## 10.10 Anticipated Permits

Permitting needs could include the following:

**State**

- SEPA Approval
- State Discharge Permit
- Joint Aquatic Resource Permit Application (JARPA)
- Hydraulic Project Approval (HPA)

**Local**

- Habitat permit (County)
- Site Plan Review (County or Town)
- Critical Aquifer Recharge area permit – CARA (County)
- NPDES Stormwater permit (County or Town)
- Building permit (County or Town)
- Grading permit (County or Town)

**Federal**

- 404 permit
- Biological Assessment opinion – NOAA
- Environmental Impact Statement

Additional permitting dollars have been estimated at $1 million for permitting including a full Environmental Impact Statement with the work proposed in 2011, if necessary.

**Table 10-1: Yacolt Capital Facility Plan**

| **Description** | **2009** | **2010** | **2011** | **2012** | **2013** | **2014** |
|---|---|---|---|---|---|---|
| Planning Activities | $150,000 | $200,000 | | | | |
| Property Purchase | | $150,000 | | | | |
| WWTP | | | $250,000 | $320,000 | $2,500,000 | $2,480,000 |
| Discharge | | | $1,075,000 | $400000 | $4,010,000 | |
| Collection System | | | | | $847,000 | $7,560,000 |
| **Annual Totals** | $150,000 | $350,000 | $325,000 | $720,000 | $7,357,000 | $10,040,000 |
| **Grand Totals** | $150,000 | $500,000 | $1,875,000 | $2,545,000 | $9,902,000 | $19,942,000 |

**Notes:**

All costs are in 2009 dollars

# Section 11: Financing

## 11.1 Yacolt Policies and History

Financing will be critical in order for Yacolt to move forward with providing sanitary sewer service. The Yacolt Comprehensive Plan update (2004) discusses requirements for their capital plans:

Policy 8-12 General obligation debt on public facility improvements shall not exceed 2.5 percent of the assessed value of the taxable properties within the town limits.

Policy 8-13 Seek funding support for capital facility projects by engaging staff in monitoring viable state and federal programs, and developing applications for financial assistance. Technical assistance shall be sought from Clark County, Clark Public Utilities, and other public agencies in developing plans, strategies and applications for outside funding assistance.

Policy 8-14 Continue to address proposals by Battle Ground School District for Yacolt to assess new developments in the community with additional school impact fees, and carefully evaluate the necessity of additional fees.

Policy 8-15 Seek funding assistance to advance elements of Yacolt's wastewater management program, including the design and construction of a public sanitary sewer system.

*Income*: Yacolt's median household income is $39,444, which is considerably higher than it was in 1990—$18,194. Yacolt experienced a large percentage increase in household income over the past decade, compared to other communities in the county, yet the median household income for the town remains relatively low. Countywide the median household income is $48,376.

Yacolt has been very successful in securing HUD Community Development Block Grant and Washington State Transportation funding for park, road, sidewalk, stormwater control and water facility projects. The Town will continue to seek financial assistance for capital projects from these and other state and federal funding sources. Descriptions of possible funding assistance programs follow.

## 11.2 Funding Options

The cost for the sanitary sewer is presumably more expensive than a municipal government the size of Yacolt will be able to handle. Possible funding options that will allow Yacolt to successfully sewer the proposed service area include:

- State Grants
- Federal stand alone grant funding
- Loans
- Underwriting by larger public entity with long term financing

- Rates
- System Development Charges
- Donated capital – Developer contributions
- Revenue Bonds
- General Obligation Bonds (partner agency required)
- Regional Partnership Alternatives

## 11.3 Project Expenses

Yacolt's previously proposed wastewater program as described in the Clark County Comprehensive Plan – 2004 (See Capital Plan for updated schedule and costs).

Table 11-1: Wastewater Management 6- and 20-Year Program Administrative and Capital Expenses

| Project Description | Financing Method | 2003 | 2004 | 2005 | 2006 | 2007 | 2008 | 2009 | 2010 | 2011-2022 |
|---|---|---|---|---|---|---|---|---|---|---|
| Install septic tank inspection ports | SRF loan to CPU | | $217,500 | | | | | | | |
| Septic tank inspection study | PWTF loan to CPU | $10,800 | $10,800 | | | | | | | |
| Septic tank inspection and maintenance program | Inspection & maintenance fee | | | | | | | | | |
| Applications for waste-water mgt program funding | General fund and CPU | $4,000 | $4,000 | $4,000 | $4,000 | $5,000 | $5,000 | | | |
| Collection system engineering report | Grants & loans | | | | | $24,000 | | | | |
| Treatment plant facility plan | Grants & loans | | | | | | $88,000 | | | |
| Collection system design | Grants, loans & SDCs | | | | | | | $150,000 | | |
| Collection system permitting | Grants, loans & SDCs | | | | | | | $30,000 | | |
| Treatment plant design | Grants, loans & SDCs | | | | | | | $340,000 | | |
| Treatment plant permitting | Grants, loans & SDCs | | | | | | | $80,000 | | |
| Collection system construction | Grants, loans & SDCs | | | | | | | | $2,000,000 | $2,000,000 |
| Treatment plant construction | Grants, loans & SDCs | | | | | | | $2,300,000 | | |

**Total Wastewater Management Six-Year Program: $377,100**

**Total 20-Year Wastewater Management Program: $4,752,000 to $5,017,000**

**Notes:**
Study Fee: $2/ERU/month.

Yacolt's Capital Program based on updated costs and facilities, as shown below:

Table 11-2: Yacolt Capital Facility Plan

| Description | 2009 | 2010 | 2011 | 2012 | 2013 | 2014 |
|---|---|---|---|---|---|---|
| Planning Activities | $150,000 | $200,000 | | | | |
| Property Purchase | | $150,000 | | | | |
| WWTP | | | $250,000 | $320,000 | $2,500,000 | $2,480,000 |
| Discharge | | | $1,075,000 | $400,000 | $4,010,000 | |
| Collection System | | | | | $847,000 | $7,560,000 |
| | | | | | | |
| **Annual Totals** | $150,000 | $350,000 | $325,000 | $720,000 | $7,357,000 | $10,040,000 |
| **Grand Totals** | $150,000 | $500,000 | $1,825,000 | $2,545,000 | $9,902,000 | $19,942,000 |

**Notes:**

All costs are in 2009 dollars

If the proposed Capital projects (Table 10-2) were to proceed based on monthly rate income only, the capital cost recovery would be as shown below.

Total Projected Cost - $ 19,942,000; Current January 2009 ERUs - 583

| | |
|---|---|
| Cost/month/ERU* | $142 |
| Cost/month/ERU** | $120 |

**Notes:**

* Assume 0% interest and no additional growth with monthly payments over 20 years, no hookup fees.

** Assume 0% interest and 2% annual growth over 20 years, no hookup fees.

If connection fees are charged, estimated costs could be in the ranges shown below:

Table 11-3: Monthly Service Fees with System Development Charges/Fees*

| SDCs | Resulting Monthly Fees |
|---|---|
| $2,500/ERU | $132/month |
| $5,000/ERU | $122/month |
| $7,500/ERU | $111/month |

**Note:**

* Based on all fees being paid at the beginning of construction using 583 ERUs, Assume 0% interest and no additional growth with monthly payments over 20 years

Further review of costs and impacts are shown in Table 11-4 below. Assumptions for this table include growth at 2%, SDCs at $7,500 paid in 2009 by all parties and construction costs beginning in 2012. It also includes grant proceeds for $6.5 million in 2016. The system would be operational in 2016 and operation costs are budgeted to begin at this time.

## Table 11-4: Projected Capital with $7,500 SDC

### Town of Yacolt

| | Compound Annualized Growth Rate | 2008 | 2009 | 2010 | 2011 | 2012 | 2013 | 2014 | 2015 | 2016 | 2019 | 2024 | 2028 |
|---|---|---|---|---|---|---|---|---|---|---|---|---|---|
| Demographics and demand: | | | | | | | | | | | | | |
| Population equivalents | 2.0538% | 1,766 | 1,804 | 1,842 | 1,881 | 1,921 | 1,961 | 2,002 | 2,043 | 2,086 | 2,217 | 2,450 | 2,652 |
| Equivalent Dwelling Units (EDUs) | 2.9841% | 534 | 660 | 673 | 687 | 700 | 714 | 729 | 743 | 758 | 805 | 888 | 961 |
| Wastewater flows (MGD): | | | | | | | | | | | | | |
| Maximum month | 2.0480% | 0.18 | 0.18 | 0.18 | 0.19 | 0.19 | 0.20 | 0.20 | 0.20 | 0.21 | 0.22 | 0.25 | 0.27 |
| | | | | | | | | | | | | | |
| Interest earnings rate: | | | | 3.00% | 3.00% | 3.00% | 3.00% | 3.00% | 3.00% | 3.00% | 3.00% | 3.00% | 3.00% |
| Construction inflation rate: | | | | 3.50% | 3.50% | 3.50% | 3.50% | 3.50% | 3.50% | 3.50% | 3.50% | 3.50% | 3.50% |
| Borrowing assumptions: | | | | | | | | | | | | | |
| Interest rate | | | | 5.00% | 5.00% | 5.00% | 5.00% | 5.00% | 5.00% | 5.00% | 5.00% | 5.00% | 5.00% |
| Term of revenue bonds | | | | 20 | 20 | 20 | 20 | 20 | 20 | 20 | 20 | 20 | 20 |
| Available rate projections: | | | | | | | | | | | | | |
| Single family residential | | | - | - | - | - | - | - | 104 | 181 | 160 | 146 | 135 |
| | | | | | | | | | | | | | |
| Financial: | | | | | | | | | | | | | |
| SDC Revenue | $ 7,500 | | 4,950,000 | 99,000 | 100,980 | 103,000 | 105,060 | 107,161 | 109,304 | 111,490 | 118,314 | 130,628 | 141,396 |
| Operations and maintenance expenses | | | | | | | | | | 211,000 | 226,000 | 251,000 | 271,000 |
| Debt service: | | | | | | | | | | | | | |
| Existing | | | | | | - | - | - | - | - | - | - | - |
| Planned | | | - | - | - | - | - | - | 929,907 | 1,433,458 | 1,433,458 | 1,433,458 | 1,433,458 |
| Total existing and planned debt service | | | - | - | - | - | - | - | 929,907 | 1,433,458 | 1,433,458 | 1,433,458 | 1,433,458 |
| | | | | | | | | | | | | | |
| Capital cash flow: | | | | | | | | | | | | | |
| Beginning Capital Fund balance | | | - | 4,950,000 | 5,197,500 | 5,454,405 | 5,166,678 | 3,275,132 | 457,885 | - | - | - | - |
| add: SDC receipts | | | 4,950,000 | 99,000 | 100,980 | 103,000 | 105,060 | 107,161 | 109,304 | 111,490 | 118,314 | 130,628 | 141,396 |
| add: interest earning | | | - | 148,500 | 155,925 | 163,632 | 155,000 | 98,254 | 13,737 | - | - | - | - |
| add: grant proceeds | | | | | | | | | | 6,386,842 | | | |
| less: capital expenditures | | | - | - | - | 554,359 | 2,151,606 | 3,022,662 | 580,926 | 6,498,332 | - | - | - |
| less: contribution to debt service | | | - | - | - | - | - | - | - | - | 118,314 | 130,628 | 141,396 |
| Ending SDC Fund balance | | | 4,950,000 | 5,197,500 | 5,454,405 | 5,166,678 | 3,275,132 | 457,885 | - | - | - | - | - |
| | | | | | | | | | | | | | |
| Capital Improvement Plan inflated | | | - | - | - | 554,359 | 2,151,606 | 3,022,662 | 12,169,628 | 12,773,684 | - | - | - |
| Capital Improvement Plan uninflated | | | | | | 500,000 | 1,875,000 | 2,545,000 | 9,900,000 | 10,040,000 | - | - | - |

More in depth finance analysis is currently being performed partially in conjunction with the County wide Regional Study and will be included in the Facility Plan.

## 11.4 Potential Funding Sources

### 11.4.1 Washington State Department of Ecology–-Water Quality Grants and Loans

The Washington State Department of Ecology administers funding for public sewer facilities and other pollution control projects. Grants and low-interest long-term loans are available under the Centennial Clean Water Grant and State Revolving Fund (SRF) Loan programs. Centennial grants cover up to $500,000 of the total eligible project cost. SRF loans may cover up to the total cost of a project. Interest rates vary. SRF loans may be used to match Centennial grants or funding from other state and federal agencies. The annual application process begins in September and ends in October.

### 11.4.2 US Dept of Housing & Urban Development—Community Development Block Grants

The Clark County Urban Policy Board allocates CDBG funding for a wide variety of projects that fall within three board program categories: infrastructure, social services and housing. Road, park, stormwater control, and water and sewer facility projects are among those eligible for funding assistance.

Projects must serve residents that have annual earnings below the current low- and moderate-income threshold. The applicant jurisdiction must demonstrate that at least 51 percent of the households that would benefit from a project are below this income threshold. Year 2000 Census information is used to determine if a project area meets the income threshold to qualify for a CDBG grant.

The applicant agency need not contribute local matching funds to receive a CDBG grant for a project, but agencies that pledge significant local funds in their applications for CDBG assistance receive high scores. The annual application process begins in October and ends in December. Projects are approved in the spring of the following year and funding for projects is available in July of that year. Clark County Dept of Community Services administers the program.

### 11.4.3 US Dept of Agriculture—Community Facilities Loans

The USDA Community Facilities program provides low-interest long-term loans to communities with fewer than 10,000 people that meet a financial needs test. Yacolt is clearly eligible to apply for loans to finance a variety of public facility projects under the Community Facilities program. Road, community center, and water and sewer facility projects are among those eligible for financial assistance. The current interest rates range from 2.5 to 3 percent, depending upon the

income characteristic of the population served by the project. A loan may have an amortization period of up to 40 years or the life of the facilities.

Some disadvantages of the program: A loan application is costly and time-consuming to prepare and there is no assurance Yacolt will be awarded the loan, as other public agencies and non-profit organizations will be competing for financing. USDA loan proceeds may not be available during the construction period. The town may need to secure interim financing to cover costs during the construction periods. USDA requires the establishment of a sizable loan reserve account that must be maintained and encumbered for the life of the loan. USDA Rural Development office administers the program.

### 11.4.4 Washington State Public Works Board—Public Works Trust Fund Loans

The Washington State Public Works Board provides low-interest, long-term loans from the Public Works Trust Fund for a variety of public facility projects. Road, stormwater control, and water and sewer facility projects are among those eligible for financial assistance. The current loan rates ranges from 0.5 to 1.5 percent, depending upon the amount of local funding contributed to the project. A local jurisdiction must impose a 0.25 percent excise tax on the sale of real property in order to be eligible for PWTF loan assistance. Additionally, projects must be included in an adopted capital facilities program. Washington State Dept of Community Trade & Economic Development administers the program. Applications are due in May, with project recommendation in September and legislative concurrence in January.

### 11.4.5 Washington State Community Economic Revitalization Board—Loans

The Washington State Community Economic Revitalization Board provides low-interest, long-term loans to local agencies for public facility projects that have a direct relationship to stimulating or preserving economic opportunity, particularly manufacturing activity. Road, stormwater control, and water and sewer facility projects are among those eligible for financial assistance. Washington State Dept of Trade & Economic Development administers the program.

### 11.4.6 State & Tribal Assistance Grant Program

Clark Public Utilities and Yacolt intend to work with the Washington Public Utilities Districts Association to secure congressional backing for a federal funding appropriation to support the construction of a public sewer system for the town. Discretionary accounts under EPA, HUD and other federal agencies may be sources of funding under this program. Applications are filed in February of each year and require strong support from congressional representatives and public agencies and organizations having jurisdiction or interest in the Yacolt area.

### 11.4.7 Washington State Transportation Improvement Board—Grants

The Washington State Transportation Improvement Board provides grants to small cities for a variety of transportation facility improvements. These grants may cover up to 95 percent of the

project costs, under the Small Cities Program. The Transportation Improvement Board reviews applications for funds under this program, with the administrative support of the state Department of Transportation. DOT administers other road improvement funding assistance programs using state and federal resources. By piggybacking road improvements with the sewer collection system work, Yacolt could potentially offset some of the costs for trench paving.

## 11.5 Local Funding

Other “local” funding opportunities that should be reviewed include:

**Growth Induced Tax Revenues:** This revenue raising technique would divert some of the incremental tax revenue generated by new growth into a capital fund so that it could be used to finance infrastructure improvements necessary to support growth. For example, a certain percentage of the increment in property tax revenue generated by new growth could be diverted for a specific number of years into a special capital projects fund. Money in that fund would be restricted to use for growth related capital project.

**Real Estate Excise Tax:** Chapter 82.46 of the Revised Code of Washington authorizes the governing bodies of counties and cities to impose excise taxes on the sale of real property within limits set by the statute. The authority of counties may be divided into four parts.

1. The Board of Commissioners may impose a real estate excise tax on the sale of all real property in unincorporated parts of the county at a rate not to exceed 1/4 of 1 percent of the selling price to fund "local capital improvements," including parks, playgrounds, swimming pools, water systems, bridges, sewers, etc. Also, the funds must be used "primarily for financing capital projects specified in a capital facilities plan element of a comprehensive plan . . .” This tax is now in effect in Clark County.

**Regional Option:** Yacolt has held preliminary discussions with other local agencies that may be interested in developing a regional approach to sanitary sewer service within Clark County. By participating in some form of coalition, Yacolt may be able to leverage larger agencies to support the construction by funding the sanitary sewer improvements. This may require the Town to deed their sanitary sewer to a regional coalition and contract all sanitary sewer functions with a regional entity.

**Rates and Fees:** Yacolt will need to adopt a rate and fee structure to establish monthly rates and possibly system development charges. These fees and charges can be established in many different ways including long-term vs. short term payoffs but will be a function of the overall costs once more accurate construction estimates are available. It is normally expected that developers will construct the collection systems for their individual improvements and roll these costs into their overall elopement pricing. The improvements would then be donated to the public agency for ownership, operation and maintenance.

## References


Carr/Associated, Inc. *Hydrogeological Study for Town of Yacolt Water System Improvements-Task 1 Report.* May, 1990.

CCN. *Yacolt Wellhead Protection Plan*. 1993.

Clark County. *Comprehensive Plan Update.* 2004.

Clark County. *Growth Management Act Update*. 2006-2007.

Clark County. *Growth Management Pla*n. 1996

Clark County. *Growth Management Plan Update*. 2002.

Clark County. *The East Fork Lewis River Water Quality Study*. August 1995.

Clark Public Utilities and Clark County Department of Community Development. *Preliminary Alternative Feasibility Study for the Yacolt Wastewater Management Committee*. December, 1999.

DEQ – Michigan, Department of Environmental Quality, State of Michigan. *Calculation of Ammonia Water Quality Based Effluent Limits*. October 2007.

EES Consulting. *Town Of Yacolt General Sewer Plan*. February, 2002.

Encon Corporation. *Town of Yacolt Wastewater Facilities Plan*. May, 1976.

EPA National Recommended Water Quality Criteria. EPA 822-R-02-47. 2002.

Hart Crowser. *The Yacolt Hydrogeologic Study*. January 1996.

Mundorff. *USGS Study*. 1964.

Metcalf and Eddy. *Wastewater Engineering Treatment and Reuse* (4th edition). 2003.

National Toxics Rule. 40 CFR 131.36.

Pacific Groundwater Group. *Town of Yacolt Wellhead Protection Plan Update*. May, 2003.

Sweet Edwards and Associates. *Supply Well Assessment*. 1983.

State of Washington. *Water Quality Assessment*. 2004.

Town of Yacolt. *Wellhead Protection Plan*. July 1993.

Turney. *USGS Regional (Intergovernmental Resource Center of Clark County) Assessment*. 1988.

Wallis Engineering. *Yacolt Sewer Feasibility Study*. February, 1997

Washington Administrative Code. WAC 173-201A, WAC 173-201A-200, WAC 173-200-040.

Washington State Department of Ecology. *Criteria for Sewage Works Design*. October 2006

Washington State Department of Ecology. *Criteria for Sewage Works Design Manual*. 2007.

Yacolt. *Comprehensive Growth Management Plan*. February 2004

Yacolt Wastewater Management Committee. *Preliminary Alternative Feasibility Study for the Yacolt*. December 1999.

# Figures

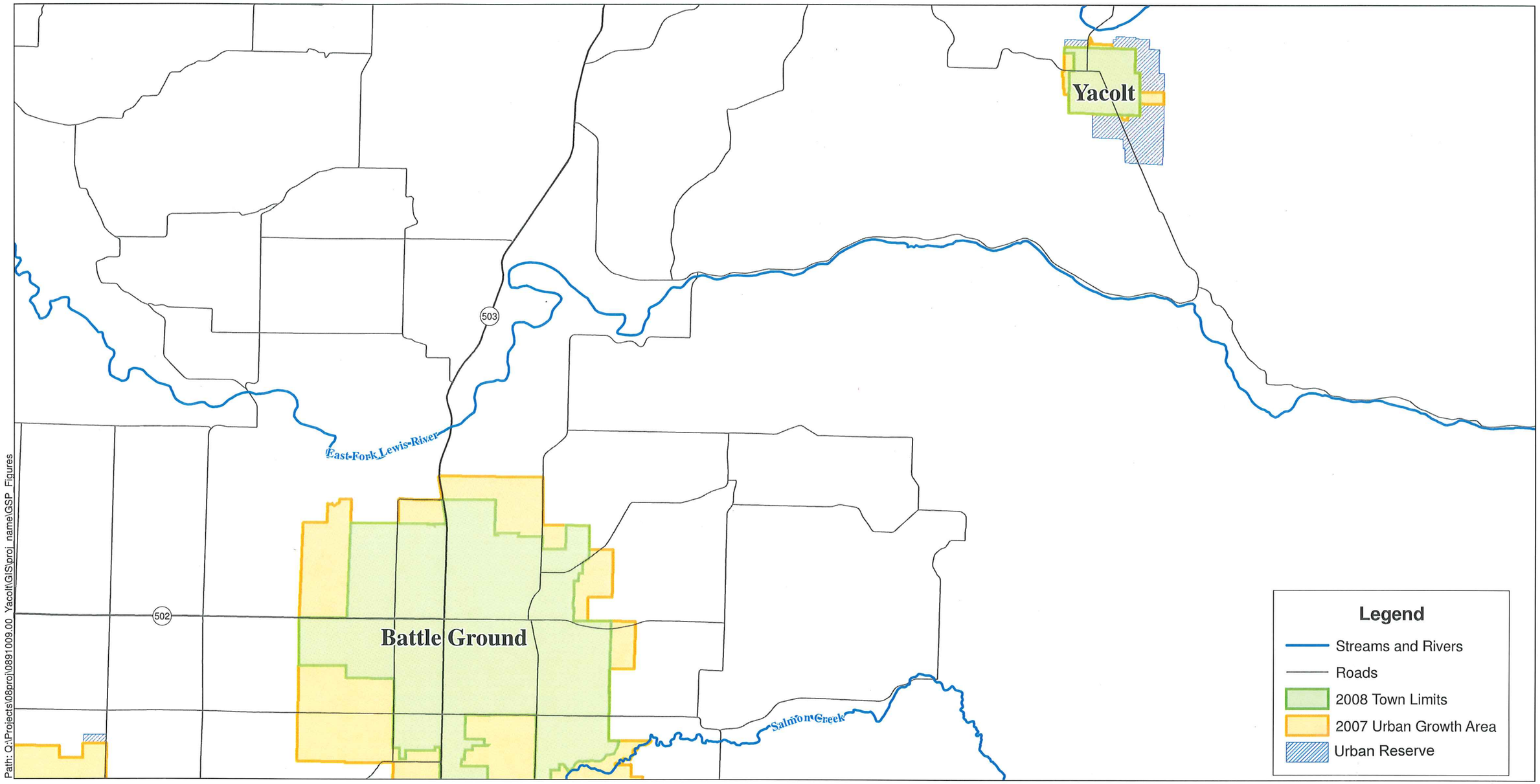


Path: Q:\Projects\08proj\0891009.00_Yacolt\GIS\proj_name\GSP_Figures

0 5,000 10,000
Scale: Feet
1 inch = 1 mile

N

**Kennedy/Jenks Consultants**

Yacolt General Sewer Plan
Yacolt, Washington

**Yacolt Vicinity**

K/J 0891009.00

**Figure 1**

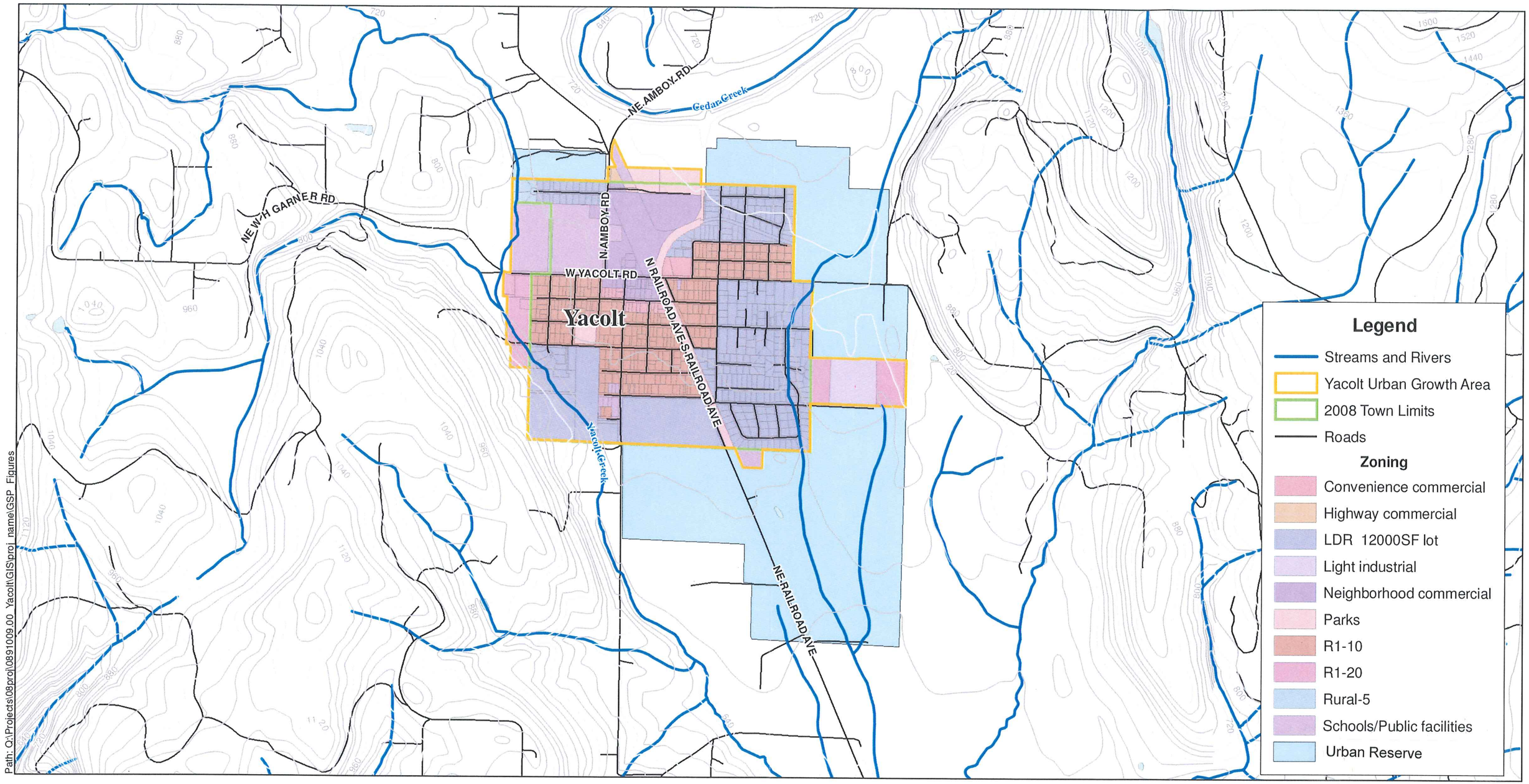


Path: Q:\Projects\08proj\0891009.00 Yacolt\GIS\proj name\GSP Figures

0 1,000 2,000

Scale: Feet

1 inch = 0.25 miles

Countour interval = 20 feet

N

**Kennedy/Jenks Consultants**

Yacolt General Sewer Plan
Yacolt, Washington

**General Topography and Zoning**

K/J 0891009.00

**Figure 2**

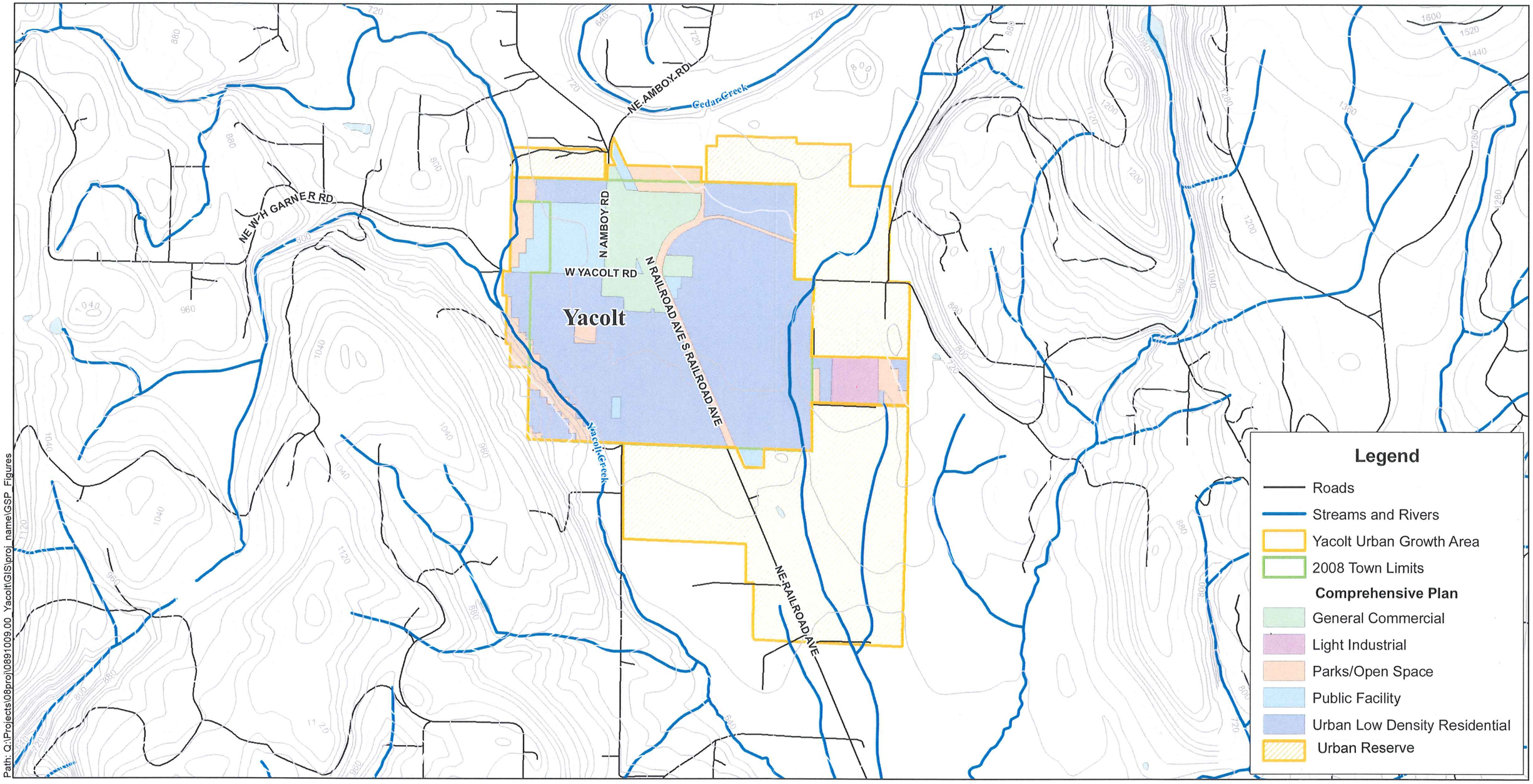


Path: Q:\Projects\08proj\0891009.00_Yacolt\GIS\proj_name\GSP_Figures

**Kennedy/Jenks Consultants**

Yacolt General Sewer Plan
Yacolt, Washington

**Comprehensive Plan Zoning**

K/J 0891009.00

**Figure 2a**

0 1,000 2,000
Scale: Feet
1 inch = 0.25 miles
Countour interval = 20 feet

N

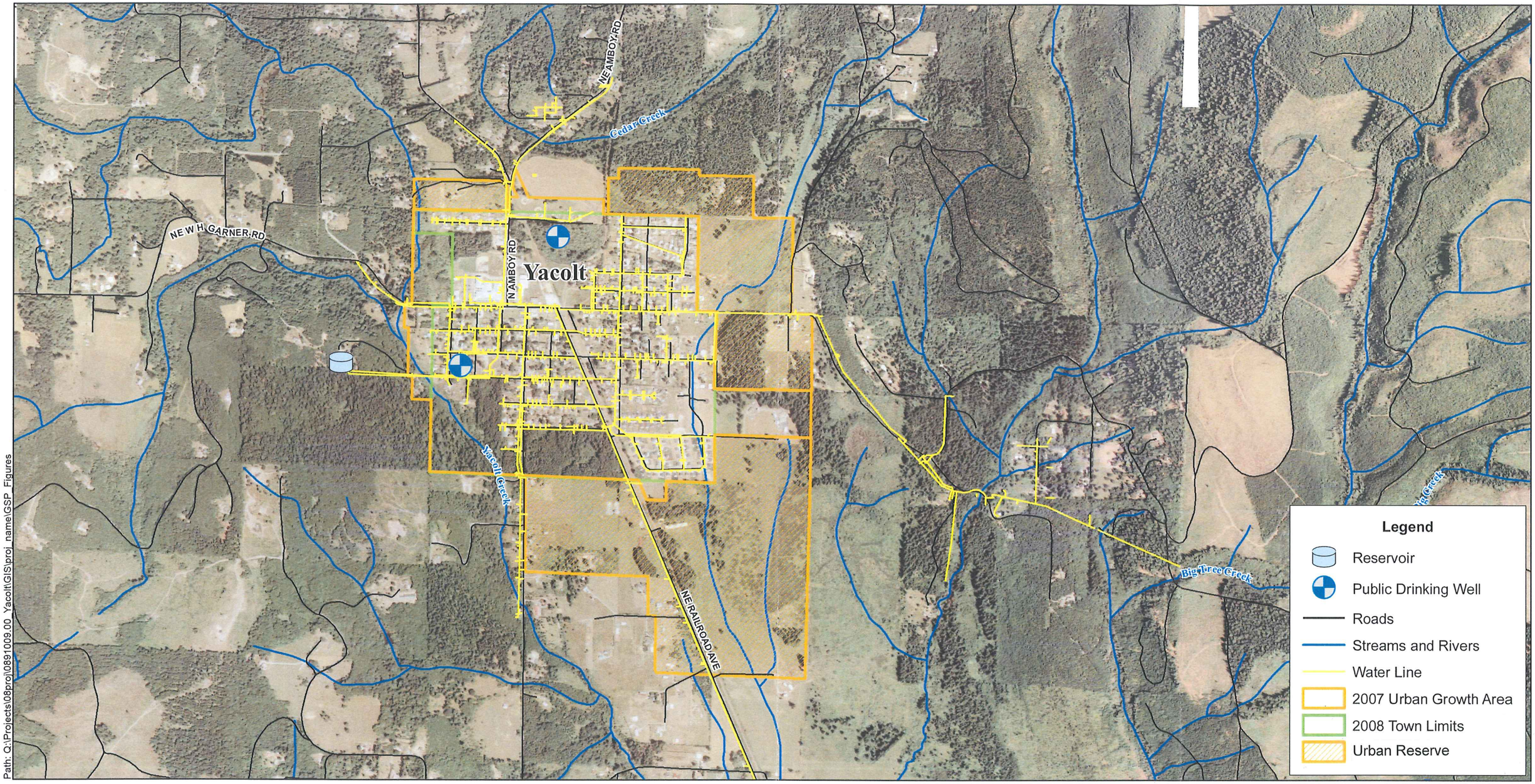


Path: Q:\Projects\08proj\0891009.00_Yacolt\GIS\proj_name\GSP_Figures

0 1,000 2,000

Scale: Feet

1 inch = 0.25 miles

N

**Kennedy/Jenks Consultants**

Yacolt General Sewer Plan
Yacolt, Washington

**Water Systems**

K/J 0891009.00

**Figure 3**

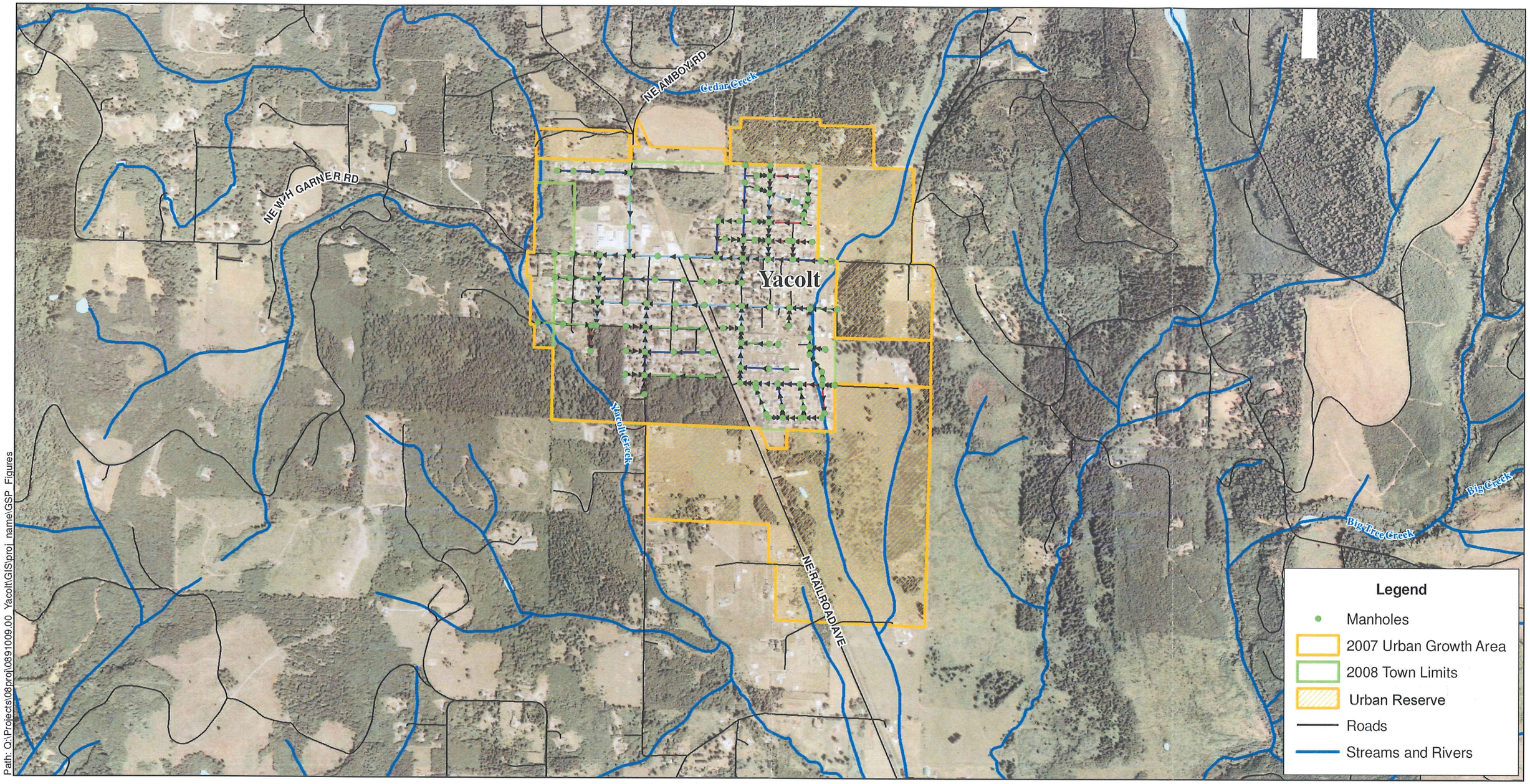


Path: Q:\Projects\08proj\0891009.00_Yacolt\GIS\proj_name\GSP_Figures

**Sewer Lines**

- Gravity: 8"; Pressure: 2"
- Gravity: 8"; Pressure: 3"
- Gravity: 8"; Pressure: 4"
- Gravity: 8"; Pressure: 6"
- Gravity: 6"; Pressure: 2"
- Gravity: 6"; Pressure: 3"

0 1,000 2,000
Scale: Feet

1 inch = 0.25 miles

N

**Kennedy/Jenks Consultants**

Yacolt General Sewer Plan
Yacolt, Washington

**Proposed Sewers**

K/J 0891009.00

**Figure 4**

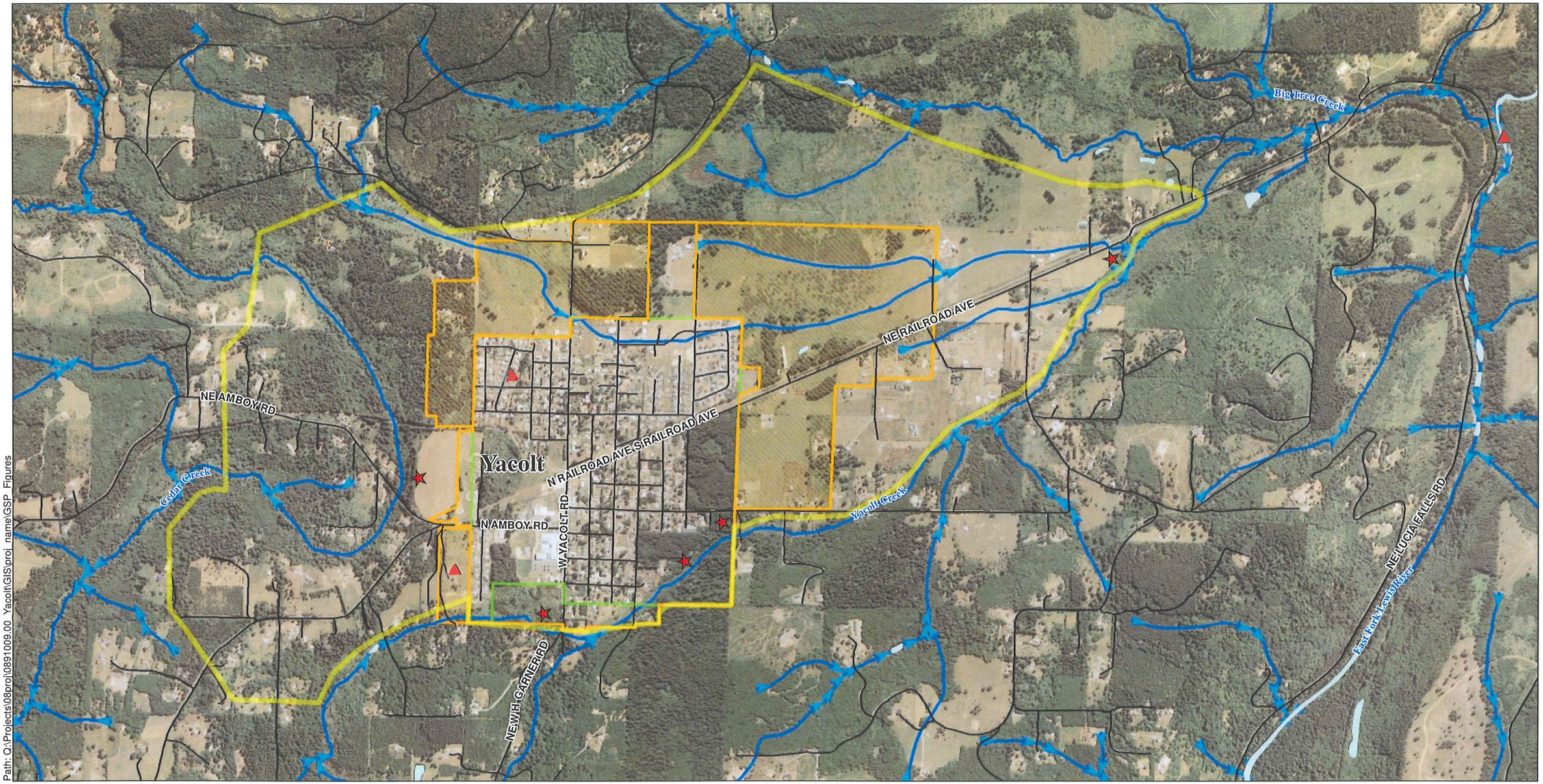


Path: Q:\Projects\08proj\0891009.00_Yacolt\GIS\proj_name\GSP_Figures

**Legend**

- Proposed 50-Year Urban Growth Area
- 2007 Urban Growth Area
- 2008 Town Limits
- Urban Holding
- Roads
- Streams and Rivers
- Potential Plant Site
- Recommended Discharge Location

N

0 1,000 2,000

Scale: Feet

1 inch = 0.25 miles

**Kennedy/Jenks Consultants**

Yacolt General Sewer Plan
Yacolt, Washington

**Potential Plant & Discharge Locations**

K/J 0891009.00

**Figure 5**

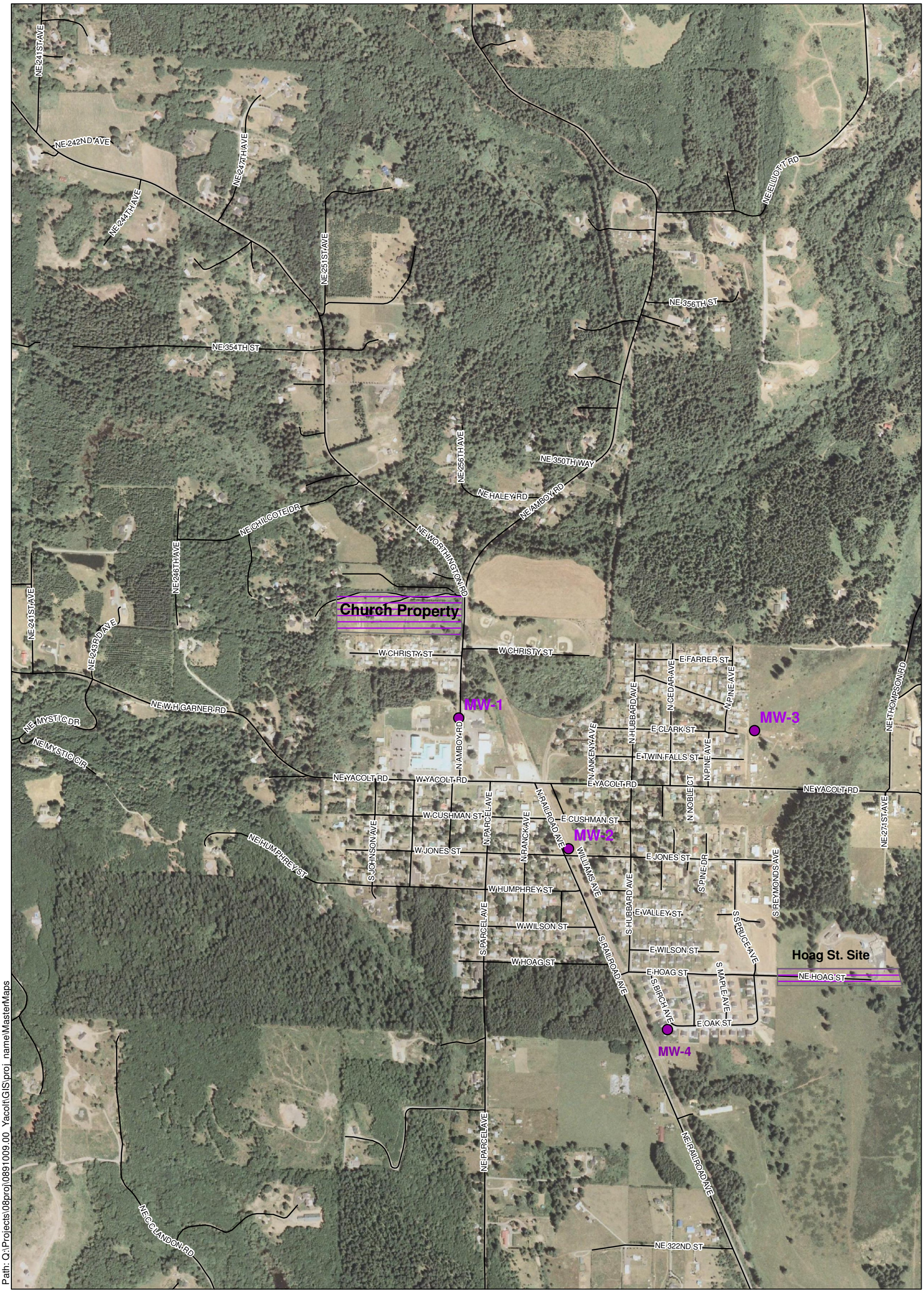


Path: Q:\Projects\08proj\0891009.00_Yacolt\GIS\proj_name\MasterMaps

**Legend**

- MW_wells
- Subsurface_Discharge

0 125250 500 750 1,000 Feet

N

**Kennedy/Jenks Consultants**

Yacolt General Sewer Plan
Yacolt, Washington

**Proposed Subsurface Discharge Locations**

K/J 0991020.00

**Figure 6**

# Appendix A

## Private and Public Well Information

# Yacolt Wells

| Well ID | ST_PLANE_X | ST_PLANE_Y | owner_name | depth | DTW | Depth to rock | date | soil |
|---|---|---|---|---|---|---|---|---|
| 1 | 1155996 | 195995 | ALAN PENCE | 115 | 52 | | Oct-76 | clay to 4', lava to 115' |
| 2 | 1153318 | 193498 | ALLAN JAY DOHN | 240 | 29 | basalt 196' | Apr-08 | clay to 17', shale below |
| 3 | 1154619 | 193436 | BILL DALKE | 248 | 31 | | Sep-79 | clay to 18', cobbles and boulders below, shale at 30' |
| 4 | 1152542 | 204394 | BLAINE AND RONNA WALSH | 164 | 41 | basalt 159' | Oct-08 | clay to 47', rock below |
| 5 | 1154619 | 193436 | BOBBI ELLIS-RANCOR | 307 | 42 | waterbearing shale 298' | Sep-90 | clay to 21', rock and shale below |
| 6 | 1155964 | 194702 | BRETT BRYAN | 36 | 22 | waterbearing gravel 28' | Dec-93 | topsoil to 5', boulders and cobbles below |
| 7 | 1155964 | 194702 | CARL AND SHANA DEROO | 47 | 25 | broken rock 50' | Oct-99 | clay w/ cobbles and boulders to 28', gravel below |
| 8 | 1154571 | 192107 | CHARLES COWAN | 599 | 216 | | 4-May | cobbles, boulders, clay to 15', rock and boulders below |
| 9 | 1151847 | 202445 | CHESTER MILLS | 200 | 100 | waterbearing basalt 190' | Oct-96 | clay to 8', basalt below |
| 10 | 1153188 | 203724 | CHRIS RHOADES | 155 | 94 | waterbearing fractured basalt 145' | Feb-81 | clay to 8', lava, boulders below |
| 11 | 1153403 | 199817 | CITY OF YACOLT | 126 | 39.5 | | Jul-80 | clay 125-126.5' (deepened) |
| 12 | 1153403 | 199817 | CITY OF YACOLT | 80 | 36.5 | waterbearing silt/clay 61' | Jun-83 | sandy clay to 3.5, boulders/clay/gravel/sand below |
| 13 | 1154724 | 199783 | CITY OF YACOLT | 58 | 35 | | Dec-94 | soil, cobbles, gravel, boulders |
| 14 | 1155674 | 201034 | CITY OF YACOLT | 76 | 45 | | Dec-94 | soil to 11', clay to 21', gravel/boulders/cobbles below |
| 15 | 1153140 | 201104 | CITY OF YACOLT | 78 | 35 | | Dec-94 | soil to 12', gravel/cobbles/boulders/sand below |
| 16 | 1153403 | 199817 | CITY OF YACOLT | 125 | 26.75 | rock 116' | Feb-73 | sand/clay to 4', gravel/clay below |
| 17 | 1158385 | 187948 | CLARK COUNTY PARKS & REC | 0 | 0 | | Jun-75 | gravel/boulders/sand to 17', rock below (abandonment?) |
| 18 | 1154453 | 202383 | CLARK PUD | 128 | 56.1 | basalt bedrock 124' | May-01 | silt to 9' mixing with sand/gravel/cobbles below |
| 19 | 1151847 | 202445 | DAN HORLACKER | 180 | 40 | waterbearing rock 170' | Jul-71 | clay to 17', rocks below |
| 20 | 1153164 | 202414 | DAN J. SHERRIE FISHER | 300 | 10 | | Jul-93 | clay to 22', rocks/basalt below |
| 21 | 1155812 | 204970 | DAVE LARWICK | 224 | 121 | | Jun-00 | clay to 12', rock/gravel/basalt below |
| 22 | 1159727 | 190545 | DAVE MULLER | 165 | 20 | | Jun-93 | rock from 1' to bottom of well |
| 23 | 1154703 | 197296 | DAVID STORK | 365 | 135 | | Oct-93 | clay to 22', rock/shale below |
| 24 | 1151871 | 203755 | DEAN PATTERSON | 261 | 23 | | Oct-93 | clay to 10', mix with boulders to 25', basalt/shale below |
| 25 | 1154619 | 193436 | DENNIS DANNING | 208 | 31 | | Sep-92 | clay/boulders to 5', rock below |
| 26 | 1154619 | 193436 | DOUG SHAUL | 347 | 77 | | Feb-97 | clay to 13', cobbles/shale/rock below |
| 27 | 1156925 | 200996 | DOUG ZITT | 340 | 230 | | Oct-94 | clay to 33', rock below |
| 28 | 1154486 | 203694 | E. R. MILLER | 180 | 35 | basalt 18' | Jan-86 | clay to 9', cobbles/boulders to 18', basalt below |
| 29 | 1154619 | 193436 | ED HUFFMAN | 383 | 27 | rock 16' | Oct-80 | clay to 8', boulders/rock below |
| 30 | 1159038 | 188586 | ELMER HARRY | 84 | 20 | rocks 18' | May-72 | clay to 12', mixing with gravel below |
| 31 | 1154571 | 192107 | ERIC PETERSON | 85 | 47 | | Mar-05 | clay w/ rocks to 15', rock/clay below |
| 32 | 1154571 | 192107 | ERNST LAEMERRT \| EDL LTD | 535 | 302 | rock 118' | Dec-95 | clay to 6', alternating clay/gravel below |
| 33 | 1154571 | 192107 | ERNST LAEMMERT | 423 | 282 | rock 131' | Nov-95 | clay to 16', alternating clay/gravel below |
| 34 | 1154571 | 192107 | ERNST LAEMMERT \| EDL LTD | 77 | 45 | | Nov-95 | clay to 8', alternating clay/gravel below |
| 35 | 1154571 | 192107 | ERNST LAEMMERT \| EDL LTD | 402 | 204 | rock 20' | Nov-95 | clay to 13', rock below |
| 36 | 1157087 | 187997 | GORDY JOLMA CONST. | 136 | 28 | rock 34' | Oct-82 | clay to 3', cobbles/boulders/gravel/clay below |
| 37 | 1154619 | 193436 | H. H. HUTTON | 200 | 25 | rock 22' | Jun-93 | clay to 22', rock below |
| 38 | 1153140 | 201104 | E & MANAVI FOX - WILL LOT E | 250 | 105 | rock 19' | Oct-91 | clay to 19', rock below |
| 39 | 1154051 | 196707 | HOWARD HATFIELD | 41 | 23 | | Aug-92 | clay to 7', broken rock/gravel below |
| 40 | 1154518 | 205003 | JEFF BROWN | 99 | 65 | | Feb-98 | rock w/clay and gravel 3 'to 57' |
| 41 | 1154696 | 196055 | JEFF SNYDER | 205 | 20 | broken shaley rock 195' | Aug-95 | sand/gravel/boulders to 43' |
| 42 | 1151871 | 203755 | JIM SANDSTROM | 128 | 25 | rock 70' | Mar-72 | clay to 4', mixing with gravel below |
| 43 | 1158518 | 193256 | JOE MILLEA | 165 | 7 | rock 45' | Dec-99 | clay with gravel/cobbles to 45', rock below |
| 44 | 1157222 | 193315 | JOHN BRIDGES | 42 | 18 | | Oct-76 | gravel/cobbles/boulders/sand to 29', silty sand/gravel to 42', silty clay below |
| 45 | 1154453 | 202383 | JOHN GRAHAM | 100 | 63 | basalt 64' | Jan-93 | soil & boulders to 12', clay to 31' |
| 46 | 1153369 | 194831 | LANCE BLAIR | 46 | 29 | waterbearing gravel/cobbles/boulders 40' | Sep-93 | soil/gravel to 6', gravel/clay to 40' |
| 47 | 1155964 | 194702 | LARRY HANSON | 37 | 24 | waterbearing cobbles/gravel 31' | Oct-92 | soil with boulders to 6', cobbles/gravel/boulders to 31' |
| 48 | 1153164 | 202414 | LAURIE MCBRIDE | 84 | 20 | rock 52' | Oct-93 | clay to 3', mixing with gravel and boulders below |
| 49 | 1154571 | 192107 | LON TWEED | 115 | 75 | rock 25' (broken rock at 15') | Jul-87 | clay to 5', gravel/boulders below |
| 50 | 1157111 | 189336 | LOUIS FERRIRIA | 318 | 61 | hard rock 20' | Nov-00 | clay to 15', rock below |
| 51 | 1154703 | 197296 | MARK KELLER | 38 | 13 | waterbearing rock 27' | Apr-92 | clay to 6', boulders/cobbles below |

## Yacolt Wells

| Well ID | ST_PLANE_X | ST_PLANE_Y | owner_name | depth | DTW | Depth to rock | date | soil |
|---|---|---|---|---|---|---|---|---|
| 52 | 1151821 | 201134 | MARK WOODS | 144 | 53 | weathered rock 7', waterbearing rock 110' | 3-Mar | clay to 7', rock below |
| 53 | 1157087 | 187997 | MARVIN PASCHKE | 37 | 15 | waterbearing shale 25' | Apr-79 | clay to 6', mixing with boulders below |
| 54 | 1153369 | 194831 | MARY SCHULAR | 54 | 15 | waterbearing gravel/sand 52' | Aug-96 | clay/gravel/boulders to 33' |
| 55 | 1153188 | 203724 | MG REDINGER | 303 | 71 | basalt 91' | 8-Feb | sandy clay to 14', boulders/cobbles/gravel below |
| 56 | 1159693 | 189219 | MICHANN BOND | 125 | 19 | hard basalt 47' | 6-Mar | boulders/cobbles with clay to 29', rock below |
| 57 | 1153318 | 193498 | MICHIEL WEST | 162 | 86 | waterbearing rock 144' | Sep-87 | clay to 7', sand/gravel/boulders below |
| 58 | 1153318 | 193498 | MICHIEL WEST | 226 | 39 | rock 27' | Sep-87 | clay/boulders to 12', sand/gravel/boulders below |
| 59 | 1153318 | 193498 | MICHIEL WEST | 315 | 157 | rock 87' | Sep-87 | clay/gravel to 7', sand/gravel/boulders below |
| 60 | 1153164 | 202414 | MIKE JACKSON | 100 | 45 | shale 24' | Mar-78 | gravel/boulders to 24', shale below |
| 61 | 1154665 | 194766 | MR. & MRS. MAIER | 55 | 15 | | May-75 | clay to 16', mixing with rocks/gravel below |
| 62 | 1154665 | 194766 | MR. & MRS. NYBACK | 78 | 31 | waterbearing shale 65' | Nov-86 | clay to 36', shale below |
| 63 | 1157111 | 189336 | NAOMI FERREIRA | 250 | 78 | hard rock 52' | Oct-99 | clay/rock to 48', |
| 64 | 1155964 | 194702 | PACIFIC NW CUSTOM HOMES | 37 | 16 | rock 35' | Oct-06 | gravel cobbles/clay to 16' |
| 65 | 1153188 | 203724 | PATTY FAULKNER | 193 | 43 | rock 13' | Jan-97 | clay to 13', rock below |
| 66 | 1156041 | 199745 | PAUL GROOMS | 195 | 64 | rock 80' | Nov-79 | open hole to 72' (no soils information) |
| 67 | 1153188 | 203724 | PAUL HOWARD | 60 | 41 | | Jul-81 | clay to 6', rock/clay below |
| 68 | 1156986 | 202308 | PETER E. ROBERTS | 62 | 31 | shale 63' | Jan-95 | clay to 12', boulders/cobbles below |
| 69 | 1153212 | 205033 | PETER LUSKY | 175 | 95 | rock 26' | May-76 | clay w/ broken rock to 26', rock below |
| 70 | 1153397 | 197349 | RAY HALLSTROM | 366 | 54 | basalt 54' | Apr-03 | clay w/ broken rock to 15', boulders/rock below |
| 71 | 1153212 | 205033 | REAZO & MARIANNE REDINGE | 365 | 71 | shale 72', basalt 179' | Feb-97 | clay to 8', mixing with boulders/gravel below |
| 72 | 1153212 | 205033 | REAZO W. REDINGER III | 265 | 75 | basalt 67' | Jun-96 | clay w/boulders & cobbles to 67' |
| 73 | 1153164 | 202414 | RICHARD CLEAVER | 236 | 75 | soft rock 47', hard rock 125' | Nov-91 | clay to 5', boulders/gravel below |
| 74 | 1155812 | 204970 | RICK BUCK | 115 | 93 | soft rock 30', hard rock 75' | Oct-90 | boulders to 30', rock below |
| 75 | 1156986 | 202308 | RICK DUNNING | 84 | 12 | basalt 31' | May-98 | clay with rock to 26', rock below |
| 76 | 1156986 | 202308 | RICK DUNNING | 59 | 30 | rock 39' | Apr-01 | boulders/cobbles with clay to 12', boulders/cobbles below |
| 77 | 1157105 | 204937 | RICK DUNNING | 385 | 74 | rock 31', basalt 84' | Oct-05 | boulders/clay to 31', rock below |
| 78 | 1157105 | 204937 | RICK DUNNING | 305 | 79 | rock 32', basalt 91' | Oct-05 | boulders/clay to 32', rock below |
| 79 | 1157105 | 204937 | RICK DUNNING | 265 | 94 | basalt 19' | Oct-07 | clay with rock to 19', rock below |
| 80 | 1153164 | 202414 | ROBERT SMALL | 58 | 29 | rock 51' | Nov-76 | clay to 7', gravel/sand/silt below |
| 81 | 1159767 | 191870 | RON BAUM GARTEN | 107 | 11 | shale 29', waterbearing shale 97' | Jun-93 | boulders/cobbles/gravel to 29', shale below |
| 82 | 1155921 | 193375 | RON SELFRIDGE | 380 | 165 | rock 22' | Jul-89 | clay to 22', rock below |
| 83 | 1153212 | 205033 | SHIRLEY KETTERER | 70 | 33 | | Mar-78 | clay to 6', sand/gravel/boulders below |
| 84 | 1156025 | 198495 | SILVER STAR HOMES | 59 | | rock 52' | Jan-06 | clay/gravel/cobbles to 13', sand/gravel below |
| 85 | 1155812 | 204970 | STAN HANSON | 304 | 85 | rock 19' | Sep-79 | clay to 19', rock below |
| 86 | 1153402 | 198584 | STEVE DEITEL | 100 | 30 | basalt 53' | Jun-91 | clay/boulders/rocks to 53', basalt/shale below |
| 87 | 1154696 | 196055 | STEVE MACK | 265 | 52 | rock 12', basalt 70' | Aug-96 | clay w/ cobbles to 12', rock below |
| 88 | 1151871 | 203755 | STEVE ROBISON | 130 | 45 | basalt 23' | Feb-74 | clay/rock/gravel to 23', basalt below |
| 89 | 1159693 | 189219 | SUE HOLLETT | 123 | 2 | rock 13' | Aug-90 | soil with boulders to 13', rock below |
| 90 | 1151871 | 203755 | THERESA FAULKNER | 225 | 75 | rock 27', basalt 36' | Jul-92 | clay to 15', mixed with gravel and cobbles below |
| 91 | 1154518 | 205003 | THOMAS RITOLA | 115 | 65 | rock 24' | Aug-98 | clay/cobbles/rock to 18', rock/gravel below |
| 92 | 1161013 | 190480 | TOM HOMOLA | 194 | 25 | shale 24', basalt 40' | Oct-77 | clay/boulders to 24', shale below |
| 93 | 1156380 | 203003 | TOWN OF YACOLT | 93 | 44 | basalt 89' | Apr-84 | boulder/clay/gravel/cobbles to 60' |
| 94 | 1153403 | 199817 | TOWN OF YACOLT | 160 | 21 | shale 61', rock 90' | Sep-75 | rock/clay to 61', shale below |
| 95 | 1156380 | 203003 | TOWN OF YACOLT | 101 | 54 | | May-84 | clay to 8', mixed with gravel below |
| 96 | 1156380 | 203003 | TOWN OF YACOLT | 101 | 49 | basalt 96' | May-84 | clay to 7', mixed with gravel/boulders below |
| 97 | 1151871 | 203755 | TROY WARD | 164 | 47 | rock 91' | Sep-00 | soil with cobbles to 49', clay with rock below |
| 98 | 1155921 | 193375 | VICTOR HALLSTROM | 140 | 18 | shale 32', hard rock 62' | Jul-97 | boulder/cobbles/clay to 32', shale below |
| 99 | 1151847 | 202445 | WALT REDDIG | 104 | 3 | shale 31', basalt 50' | Sep-00 | clay to 25', mixed with broken rock below |
| 100 | 1154703 | 197296 | WILLIAM J. HATFIELD | 37 | 28 | | Oct-96 | clay with cobbles/boulders to 25', boulders/cobbles/gravel below |
| 101 | 1155375 | 197902 | WM. P. GROOMS | 80 | 54 | rock 45' | Mar-78 | sand/gravel/cobbles/boulders to 45' |

# Yacolt Production Well Nitrate Levels 2001-2008

| Well | Dec-01 | Sep-02 | Sep-03 | Jul-04 | May-05 | Aug-06 | Aug-07 | Jul-08 |
|---|---|---|---|---|---|---|---|---|
| 403 | 2.1 | 2.1 | 2.2 | 2.1 | 2.1 | 2.2 | 2.1 | 2.1 |
| 407 | | | 1.9 | 2.0 | 2.7 | 2.1 | 1.9 | 2.1 |
| 404 | 2.0 | | | | | | | |

## Nitrate Results for Yacolt Monitoring wells Aug-03 thru Aug-08

**Table 1. Monitoring Wells in the East Fork Lewis River Watershed**

| ***Date Sampled*** | Aug-03 | Oct-03 | Dec-03 | Feb-04 | Apr-04 | Jun-04 | Aug-04 | Oct-04 | Feb-05 | Apr-05 | Jun-05 | Aug-05 | Oct-05 | Dec-05 |
|---|---|---|---|---|---|---|---|---|---|---|---|---|---|---|
| Sloniker domestic | 1.00 | 1.00 | 0.9 | 0.8 | 0.9 | 0.9 | 0.8 | 0.8 | 0.8 | 0.7 | 0.8 | 0.9 | 0.88 | |
| Annie Witt domestic | 2.7 | 2.6 | 2.8 | 2.6 | 2.7 | 2.7 | 2.6 | 2.7 | 2.8 | 2.7 | 2.7 | 2.8 | 2.85 | 2.9 |
| Well B-Lucky Witt | 0.3 | 0.5 | 1.8 | 0.3 | 0.2 | 0.3 | 0.4 | 0.5 | 0.4 | 1.7 | 0.3 | 0.3 | 0.42 | 1 |
| Swendsen domestic | 1.1 | 0.9 | 0.2 | 0.2 | 0.6 | 0.8 | 0.8 | 0.8 | 0.3 | 0.2 | 0.4 | 0.8 | 0.64 | 0.2 |
| Yacolt MW1 | | 0.0 | 0.0 | 0.0 | 0.0 | 0.0 | 0.0 | 0.0 | 0.0 | 0.0 | 0.0 | 0.0 | 0.0 | 0.0 |
| Yacolt MW3 | | 0.2 | 0.3 | 0.2 | 0.2 | 0.2 | 0.2 | 0.2 | 0.3 | 0.2 | 0.2 | | 0.26 | 2 |
| Yacolt MW2 | | | | | 2.5 | 1.8 | | | 1.7 | 1.8 | 1.8 | 1.8 | | 0.2 |
| Yacolt MW4 | | | | | | | | | | | | | | |

| ***Date Sampled*** | Feb-06 | Apr-06 | Jun-06 | Aug-06 | Oct-06 | Feb-07 | Apr-07 | Jun-07 | Aug-07 | Oct-07 | Dec-07 | Feb-08 | Apr-08 | Jun-08 | Aug-08 |
|---|---|---|---|---|---|---|---|---|---|---|---|---|---|---|---|
| Sloniker domestic | | 0.7 | 0.8 | 0.8 | 0.7 | 0.6 | 0.6 | 0.7 | 0.6 | 0.77 | | 0.8 | 0.86 | 0.84 | 0.81 |
| Annie Witt domestic | 2.6 | 2.6 | 2.8 | 3.2 | 2.9 | 2.7 | 2.6 | 2.9 | 2.9 | 3.02 | 3.14 | 3.30 | 3.48 | | 3.25 |
| Well B-Lucky Witt | 0.9 | 0.3 | 0.3 | 0.4 | 0.4 | 0.3 | 0.3 | 0.3 | 0.4 | 0.6 | 1.48 | 1.30 | 0.4 | 0.38 | 0.46 |
| Swendsen domestic | 0.2 | 0.5 | 0.9 | 0.6 | 0.7 | 0.6 | 0.3 | 1.2 | 0.6 | | 0.31 | 0.40 | 0.84 | 1.39 | 1.34 |
| Yacolt MW1 | 0.2 | 0.0 | 0.0 | 0.0 | 0.0 | 0.0 | 0.0 | 0.0 | 0.0 | 0.0 | 0.0 | 0.0 | 0.0 | 0.0 | 0.0 |
| Yacolt MW3 | 0.3 | 0.3 | 0.2 | 0.2 | 0.2 | 0.3 | 0.3 | 0.2 | 0.2 | 0.26 | 2.06 | 0.40 | 0.47 | 0.31 | 0.3 |
| Yacolt MW2 | 1.9 | 1.8 | 1.9 | | | 1.9 | 1.7 | 1.8 | | | 0.34 | 2.40 | 2.44 | 2.27 | |
| Yacolt MW4 | 1.7 | 1.8 | 2.3 | 2.5 | 1.4 | 2 | 2 | 2.5 | 2.2 | 2.77 | 3.36 | 3.10 | 2.95 | 3.11 | 3.2 |

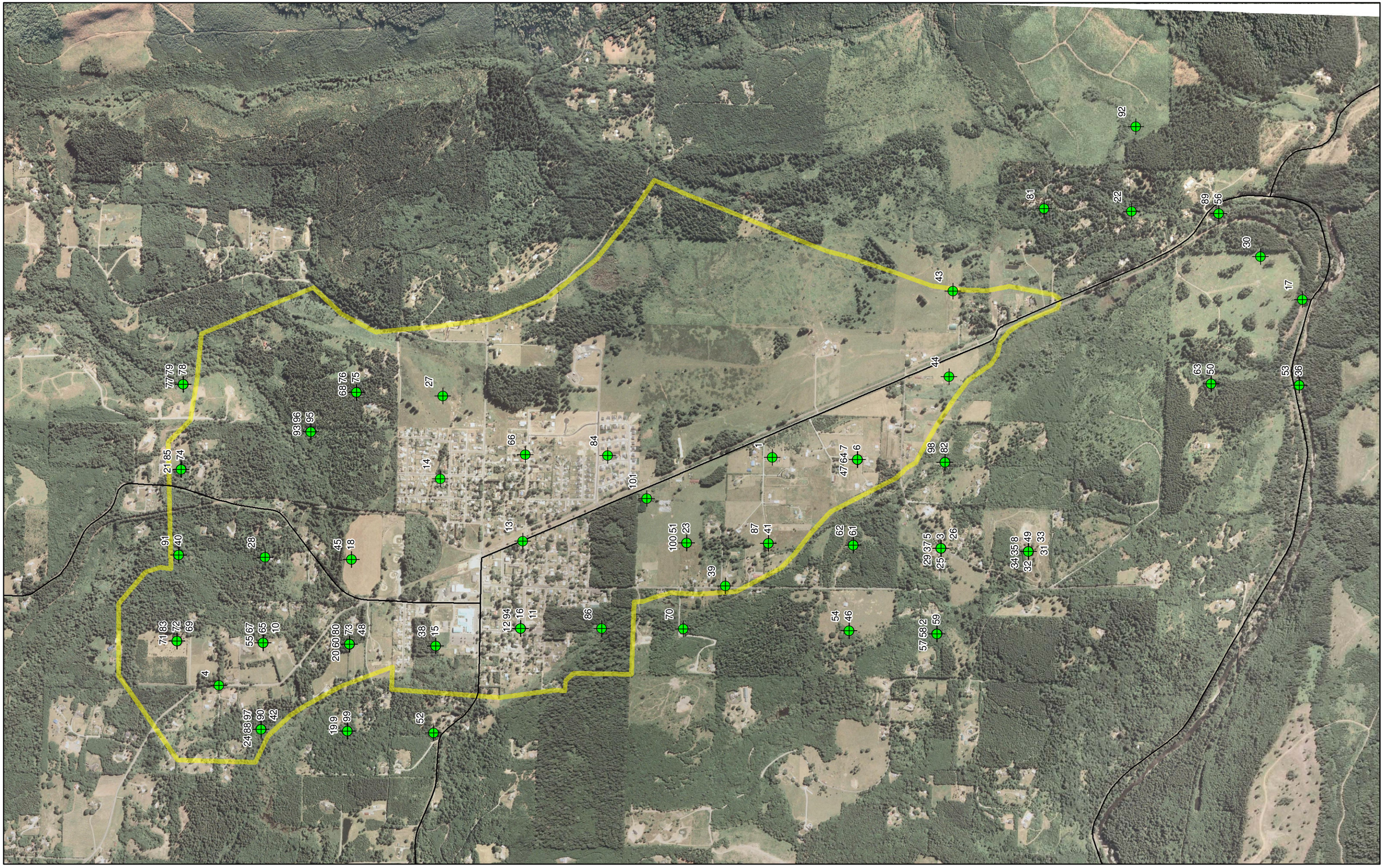
77 79
78
21 85
74
93 96
95
68 76
75
91
40
28
27
45
18
14
66
13
84
101
71 83
72
69
4
55 67
65
10
20 60 80
73
48
38
15
12 94
16
11
86
100 51
23
39
70
1
87
41
47 64 7
6
62
61
54
46
98
82
29 37 5
3
26
25
57 58 2
59
24 88 97
90
42
19 9
99
52
34 35 8
49
32
33
31
63
50
53
36
30
17
89
56
81
22
92
43
44

# Appendix B

## Technical Memos and Email

- No. 01 - Collection System
- No. 02 - Treatment
- No. 03 - Discharge
- No. 04 – Transmission
- County Ground Discharge email

3 October 2008

# Town of Yacolt Memorandum No. 01 (Draft)

**Prepared For:** Joe Warren, Mayor

Paul Tester & Pete Roberts, Town of Yacolt

**Submitted by:** Chuck McDonald, Kennedy/Jenks Consultants

**Subject:** Collection System for the Town of Yacolt
Town of Yacolt General Sewer Plan
KJ No. 0891009*00

## Purpose

The community of Yacolt has contracted with Kennedy/Jenks Consultants to provide a General Sewer Plan, in conformance with RCW 90.48.110, WAC 173-240-050 and the Washington State Department of Ecology Criteria for Sewage Works Design Manual (2007), to address and evaluate the feasibility of constructing a centralized sanitary sewer collection and treatment system in order to meet Clark County established criteria for continued Yacolt urban expansion and development. Currently, the community is served by individual onsite septic systems on large urban lots.

Because there is currently no sanitary sewer system in Yacolt, the review and selection of collection, treatment and discharge technologies and locations is a highly interactive process. The location of the treatment plant is somewhat subject to the point of discharge as well as the resulting collection system technology. It would be simplest to select a discharge location first and select the collection system technology to economically support this location. From this selection process and Ecology discharge criteria, the treatment technology can then be selected.

Clark County adopted policies related to the 2004 (2007 adopted) Clark County Comprehensive Plan update that affect Yacolt. These include:

## Clark County – Comprehensive Growth Management Plan Update - Framework Plan Policies

Policy 1.1.1- There are no standards for the Yacolt urban growth area due to lack of public sewer. A mix of residential uses and densities are or will be permitted. Neighborhoods are to have a focus around parks, schools, or common areas.

**Land Use Policy**

Policy 1-1 The Yacolt Urban Growth Area shall encompass sufficient area and employ appropriate urban densities that will accommodate the growth that is projected to occur for a 20-year planning period.

Policy 1-3 Protect the underlying aquifer from contamination to help assure a safe supply of public drinking water.

A series of technical memorandums (TM) will be produced evaluating different aspects of a centralized sanitary sewer system. This TM is dedicated to the evaluation of the various types of collection systems that could be installed, though the decision may impact the selection of a treatment system.

## Existing Conditions

The existing development within Yacolt consists of the following:

- The Town of Yacolt (incorporated area) is 315 acres, with an estimated population (2008) of 1470.
- Average household size in Yacolt is 3.31 persons (2000 census).
- There are approximately 380 single family residential units located within the UGA, averaging 12,500 sf in size.
- There are approximately 5 multi-family dwelling units in Yacolt.
- Public buildings and structures comprise a total of approximately 71.5 acres within the UGA.
- There are 33 acres of commercially zoned land with 10 of thoise acres having improvements. There are 12 commercial establishments in the town.
- Soils in the Yacolt valley are primarily unconsolidated sediments deposited by streams and glacial activity and include a mixture of gravel and sand with variable amounts of silt. There are areas of bedrock and high groundwater. These areas are unmapped and scattered throughout the Town.
- The Town is located in a valley (elevation 680-720) surrounded by hills reaching 1000’ elevation. The entire valley drains to the south.
- The Yacolt urban area lies within a valley, experiencing mild weather and averaging 80” of rain per year.
- Groundwater in the area is normally found at approximately 40 feet below ground surface.

- The Town of Yacolt is served by potable water by the Clark Public Utility District. Water comes from a shallow unconfined aquifer – the Yacolt Aquifer with wells at 128' deep.
- The valley is surrounded by 4 creeks; Cedar Creek runs west along the north edge of the valley draining to the North Fork of the Lewis River; Yacolt Creek runs south along the west side of the valley; Weaver Creek and Big Tree Creek (also known as Big Creek) run along the east side of the valley proceeding south where they tie in with Yacolt Creek before becoming part of the East Fork of the Lewis River.
- The Yacolt Primary School has a Large On Site System (LOSS) with a pressure distribution drainfield regulated by the Department of Health. The system was designed for 825 people and flow of 5,200 gallons/day.
- The Town is currently served by on-site septic systems. They systems include standard gravity and pressure systems. The tanks are predominantly concrete. The Town and Clark Public Utilities have installed access risers on approximately 2/3rds of the tanks for improved monitoring and cleaning. The Towns current Ordinances require inspection annually for those systems that are not standard gravity installations and bi-annually for the systems that are standard gravity units.
- While the lots are large in comparison with standard urban zoning, it is anticipated that most tanks and plumbing will be located in the back or side yards.
- Approximately 325 acres are currently in urban holding awaiting sanitary sewer service which will allow for annexation into the Town of Yacolt.

## Wastewater Characteristics

### Flow

The current flow within Yacolt averages 140,000 gpd (Average Daily Flow – ADF). This value is not measured but is based on the potable water usage provided by Clark Public Utilities (water purveyor) with review using other flow criteria.

Table 1: -Yacolt Flow

| Criteria/Measurement | Methodology | Average Daily | Peak Daily (3) |
|---|---|---|---|
| CPU Potable usage | Measured Flow | 140,000 gal/day | 292 gallons/minute |
| Ecology – Total Population | 100 gal/person @ 1470 population | 147,000 gal/day | 306 gpm |
| Ecology – Equivalent Dwellings | 500 single family residences @ 3.31 people/household + | 165,500 gal/day<br><br>+ 9,764 gal/day | 386 gpm |

| Criteria/Measurement | Methodology | Average Daily | Peak Daily (3) |
|---|---|---|---|
| | School @ enrollees (867+ 75)/32/ERU = 29.5 ERU's + 12 businesses @ .25 (estimated) ERU/business = 3 ERU's | + 993 gal/day = 185,257 gal | |
| Projected 2010 flow | 100 gal/person @ 1529 population plus commercial & industrial (total 1918 equivalent) | 191,800 gal/day | 400 gpm |
| Projected 2030 flow | 100 gal/person @ 2273 population plus commercial & industrial (total 2871 equivalent) | 287,100 gal/day | 598 gpm |

**Notes:**
(3) Peak flow was calculated using a peaking factor of 3 (Ecology recommends a minimum of 2.5-Figure C1-1, Orange Book, value for population would be 3.7); due to the small size of the basin and the anticipation that an alternate system is planned (which should further reduce I&I),); due to the small size of the basin, 3 was used for these calculations. No separate value for infiltration/inflow (I&I) was used at this stage.

## Projected Wastewater Volumes

**Table 2: Characteristics**

| Year | Flow | BOD | TSS | Bod # | TSS # |
|---|---|---|---|---|---|
| 2010 | .192 | .2 # pcpd | .2 # pcpd | 384/day | 384/day |
| 2030 | .287 | .2 # pcpd | .2 # pcpd | 574/day | 574/day |

## Collection System Alternatives

The Town of Yacolt is looking at multiple options for their collection system. The following gravity and pressure systems have been investigated to determine a recommended alternative based on initial cost, operational flexibility and long term operational costs.

1. Gravity sewer
2. Septic Tank Effluent Pump (STEP)
3. Septic Tank Effluent Gravity (STEG) Systems
4. Vacuum systems
5. Grinder systems

## Gravity Sewer

Gravity sewer is the normal preferred installation for long term cost, operation and maintenance. It is simple in its operation, and designed to be relatively low maintenance. Based on the topography of Yacolt, generally dropping in elevation from north to south and east to west, a gravity installation could mirror the natural topography

with the optimal installation collecting and bringing all flow to the southwest corner (within the current Urban Growth Area) of the urban developed area. This would control costs most efficiently by taking advantage of the normal slope of the valley floor thus reducing excavation as much as possible. The general slope across the current City limits from north to south is approximately (40' in elevation over 3700') = ~1% slope. Consequently, line installations depths would be at 6' – 8' in depth to provide service to most homes on slabs or with crawl spaces (a review of potential basements resulting in deeper installations has not been accomplished at this time). With location of treatment facilities at the lowest point (SW corner) no collection system pump stations should be required. Advantages of a gravity installation would be the potential cost impact of hitting areas of bedrock or large boulders within the valley and the inherent costs involved with deeper gravity installations over more shallow alternative service lines. Public Works staff has stated that there are areas of underground deposits (boulders and bedrock) that can be encountered anywhere within the valley. There is also a potential of encountering groundwater (perched groundwater areas) as depth of installation increases. These potentials would need to be anticipated in bidding, and the anticipated cost impacts of both of these possible impacts would be difficult to ascertain prior to construction. It is anticipated that a gravity system would be the most costly as the depth of the house services and the relatively flat terrain would drive the depth of the system. In addition, limited public right of way improvements and the Town's desire to limit road cuts and install lines outside of pavement could also result in cost impacts for a gravity installation. Also, gravity sewer systems do have more potential for infiltration and inflow (I&I). While pipe materials and construction methods have improved, there is still more connections and the possibility of infiltration, roots or other impacts to a gravity system.

### Septic Tank Effluent Pump (STEP)

STEP systems are used in areas that have conditions that would make gravity service difficult or expensive. Examples of the conditions that other municipalities have experienced that have caused them to select a STEP system include bedrock at shallow depths, high groundwater, limited funding and high variability in topography. STEP systems use standard sized septic tanks (1250 – 1500 gallons for a normal household) to provide basic solids digestion and reduction, storing the bulk of the solids in the septic tanks with pump off and treatment of the resultant effluent. Flows are collected in small diameter plastic lines installed normally at 3' deep. There are limited appurtenances along a STEP collection line reducing possibilities of overflow, odor release and costs. Costs (capital and O&M) are generally lower then gravity installations. The location of the system discharge point will need to be analyzed for a STEP system. Ideally, it would be beneficial for a STEP system to have the discharge point uphill as the system needs to maintain fully pressured lines to operate properly.

The private property work could potentially be higher with STEP systems. While the use of existing septic tanks is not normally recommended for a new STEP system, by having clear criteria for acceptability of these tanks, the Town could allow inclusion of these tanks into a sanitary sewer system. Pumping and inspection of existing tanks could

allow for inspection and verification of the condition and usability of existing tanks. By including existing tanks the project costs should be reduced. Many of the existing tanks in Yacolt have already been 'prepared' for potential use as STEP tanks including requiring of more stringent criteria for new tank installations and the installation of access ports on existing tanks for ongoing maintenance and inspection. Subsequent retrofitting of the remaining existing tanks that have not currently had the access ports installed would also help control overall costs of the project. Another option using STEP systems could be to simply install smaller pump chambers outside of standard septic tanks which would reduce the site impacts, costs and keep the process 'cleaner'. STEP systems normally have a full day (200-300 gallons) of capacity in case of power outages. This helps to alleviate the concern for impacts to individual households and the need for backup power for each unit. STEP systems do require periodic inspection and pumping. This can be labor intensive.

### Septic Tank Effluent Gravity (STEG) Systems

STEG systems are used in areas that have specific impacts that could restrict traditional gravity service or are difficult or expensive to serve with traditional gravity service. Examples of the potential reasons that other municipalities have selected STEG systems include bedrock at shallow depths, high groundwater, limited available funding, reduced availability of solids treatment and high (steep) variability in topography. STEG systems are normally used in areas with limited solids handling capabilities and topography that would require deep installation of gravity lines. STEG systems are often used in combination with STEP systems. STEG systems use standard sized septic tanks (1250 – 1500 gallons for a normal household) to provide basic solids digestion, reduction and storage capabilities for the system with gravity discharge of the resultant effluent thus reducing the need to pump the effluent. Because a majority of the settleable solids are not being transported with STEG systems (similar to STEP's with approximately 50%+ solids reduction in conveyed wastewater), the need to maintain normal gravity velocities (of 2 foot/second) is not necessary, so installation of pipes with less slopoe is practical. The general slope across the current Town limits from north to south is approximately (40' in elevation over 3700') 1% slope, so further research on use of STEG systems could be warranted; however, steeper slopes are normally recommended. Installation depths would probably be similar to a gravity sewer, which would increase costs over a STEP system (for the collection system). The location of the discharge point will need to be analyzed for a STEG system. While the use of existing septic tanks is not normally recommended for a new STEG system, by having clear criteria for acceptability of these tanks, the Town could allow inclusion of tanks into the sanitary sewer system. Pumping and inspection of existing tanks could allow for inspection and verification of the condition and usability of existing tanks. By including existing tanks the project costs should be reduced. Many of the existing tanks in Yacolt have already been 'prepared' for potential use as STEG tanks including more stringent criteria for new tank installations and installation of access ports on existing tanks for ongoing maintenance and inspection. Subsequent retrofitting of the remaining existing tanks that have not currently had the access ports installed would help control overall costs of the project. STEG systems will still produce and discharge some solids. STEG systems will produce

more potential odor and corrosion issues then any of the other technologies. STEG systems do require periodic inspection and pumping, which can be labor intensive.

### Vacuum Systems

Vacuum systems have been developed and used primarily in flat areas or areas of high groundwater or bedrock. They are recognized for their reasonable cost and simplicity of operations and maintenance. Vacuum systems rely on multiple drops for each line (run) as well as intermediate connections of services along the runs to function effectively. There are limitations relative to the amount of lift available in each run as well as within the entire system. The systems are normally restricted to five lifts or drops in a run of line and approximately 1500' of length. Consequently, the lifts/drops also control the depth of the installation. The tanks normally used are small (25-30 gallons), with optimal operation a result of approximately 10 gallons of sewage volume discharged for each vacuum cycle. Higher volumes (of discharge) result in loss of inertia and resulting reduction of propulsion and ineffectiveness of the system. For larger systems, multiple community vacuum 'pump stations' are installed to transmit flow to the treatment facilities. The use of vacuum systems in conjunction with STEP tanks is not recommended by the manufacturer based on the high flow volumes that would inundate the individual vacuum pits. Based on the existing septic tanks and the desire to use the existing tanks, one of the primary vacuum manufacturers did not feel that this is an optimal installation scenario for vacuum systems; however, a review is underway and included as an addendum to this document. While there may be some concern for the impacts of a power outage, backup power would only be necessary at the vacuum pump station.

### Grinder Systems

Individual home grinder systems, similar to STEP installations, have been used in similar service installations as Yacolt. These systems have been installed similar to STEP/STEG when the same issues are prevalent (high water, bedrock) or where traditional gravity service cannot be installed without the need for a pump station. In most circumstances, gravity systems (existing gravity lines or pump stations) are located nearby.

The primary difference in the systems is that grinder systems, like vacuum or gravity installations send all of the sewage, including all of the solids into the sewer system. This is advantageous where full solids treatment is available (ie a wastewater plant with full capabilities has been constructed). However, without the availability of full solids treatment locally (existing gravity sewers downstream) or a communities desire to reduce costs by not constructing a full treatment plant, these impacts must be considered for choosing this installation. While there is a minor reduction of pumping capabilities in the solids handling pumps (compared with the STEP effluent only pumps) as well as some potential additional friction losses in the pressure lines, the major concerns remain transmission and control of settlement of the solids within the pressure lines as well as treatment of the resulting solids. To use grinder systems within Yacolt, it

would be necessary to either retrofit all tanks by pumping the tanks and adding a sloped bottom (normally by pouring concrete) in order to concentrate the solids in the vicinity of the pump for adequate removal or install new pump chambers at each lot. Many of the installations use smaller vaults (25-60 gallons) and there is some concern as to available volume capacity if power outages are encountered. Pressure laterals and lines are normally sized somewhat larger to accommodate solids movement within the system as compared with STEP systems.

Grinder systems have functioned well in installations throughout the United States.

### Other

Yacolt could decide that growth and increased densities are not desirable. If this is the position that the general public is content with, continued use of septic systems or use of modified (de-nitrifying) systems could be a suitable alternative. At this time there is no clear direction or input from the general public. We would recommend that a public input process be developed to obtain this input and include it within the final report. It would help to support both the interest and the potential timeframe for moving forward with the development of a sewer system within Yacolt.

Table 3: System Type

| System | On-Site | Collection Lines | Transmission |
|---|---|---|---|
| Gravity | Laterals to homes | New gravity | New gravity or<br>Pump station & pressure main |
| STEP | Existing tanks with individual pumps | New pressure | New pressure line or<br>Pump station & pressure main |
| STEG | Existing tanks only | New small gravity | New small gravity lines |
| Vacuum | New chambers | New vacuum | New vacuum line<br>Pump station & pressure main |
| Grinder | Existing tanks retrofitted | New pressure | New pressure line<br>Pump station & pressure main |

Table 4: System Cost Estimate [Preliminary]

| System | On-site Cost/Unit & Total | Collection Lines | Total* |
|---|---|---|---|
| Gravity | $5,074/$2,674,000 | $9,572,000 | $12,246,000 |
| STEP | $6,600/$3,300,000 | $4,786,000 | $8,086,000 |
| STEP (new) | $6,654/$3,507,000 | $4,786,000 | $8,293,000 |
| STEG | $4,000/$2,000,0000 | $5,901,000 | $7,901,000 |
| STEG (new) | $5,183/$2,731,000 | $5,901,000 | $8,632,000 |
| Vacuum | $7,052/$3,526,000 | $4,886,000 | $8,412000** |
| Grinder | $7,750/$3,875,000 | $5,598,000 | $9,473,000 |
| Grinder (new) | $8,049/$4,025,000 | $5,598,000 | $9,839,000 |

*Revised numbers appear in General Sewer Plan Chapter 7.
These numbers do not include associated project costs.

Assumptions:
- All scenarios – collection lines in front of all current lots; transmission lines same; treatment as sand/gravel filter system, 3 acre storage lagoon and outfall infiltration drain.
- Gravity on-site= 4" laterals @ 50' @ $50/ft
- STEP– on-site assumes use of existing tanks, minimal risers (100 lots x 2 risers), STEP pump systems, laterals etc. Estimate with pump, panel 50' of piping and miscellaneous = $2,000.
- STEG - on-site assumes use of existing tanks, minimal risers (100 lots x 2 risers), small gravity laterals etc. estimated at $500. Assume collection line costs are equal to STEP at this level; however, costs would probably be somewhat higher.
- Vacuum – on-site assumes new vaults and vacuum systems, added 25% more vaults (quoted 1 vault/2 houses) plus $100,000 for pavement repair plus field services plus installation.
-**Vacuum total includes added vaults for all lots (500) vs. 315
- Grinder – on-site assumes use of existing tanks, concrete pour (sloped bottom) in tanks, minimal risers (100 lots x 2 risers), Grinder systems, laterals etc. – used same estimate as STEP = $2,000
-STEP, STEG, Grinder –new installations are using all new tanks
Costs for all installations are attached in the addendum

Table 5: Ratings-Impacts

| System | Topo | Ground water | Bedrock | Construct Timing | Property Impact | O&M | Cost | Points |
|---|---|---|---|---|---|---|---|---|
| Gravity | + | - | - | - | + | + | - | 13 |
| STEP | 0 | 0 | + | + | - | - | + | 15 |
| STEG | + | - | - | + | - | 0 | + | 14 |
| Vacuum | - | 0 | + | 0 | + | 0 | + | 16 |
| Grinder | 0 | 0 | + | + | 0 | - | - | 14 |

**Notes:**
Ratings + = Positive (3); 0 = Neutral (2); - = Negative (1)

Ratings were based on how each item affects the type of installation, either positively or negatively. Positive ratings (+) are seen as a benefit to that type of installation; (-) is seen as a negative related to that type of installation. Costs are based on overall cost estimates.

## Recommendations

All of the current technologies require some form of solids treatment-solids handling as all of the collection methodologies will result in a residual solids content.

- Gravity, vacuum or grinder systems will all produce higher capacity need for solids handling and disposal in Yacolt, with the cost higher for these (except vacuum) technologies as compared to STEP/STEG.
- Gravity installations and STEG could benefit from the natural gradient of the Yacolt valley (sloping northeast to southwest), however without have a discharge site selected or purchased, the full benefit/understanding is not definable. While the valley is relatively flat, the slope is equal to that needed for normal gravity

pipe slopes, so overdepth installations would not be anticipated; however, ground conditions related to bedrock or large boulders can only be projected.

- Grinder systems could take advantage of existing septic tanks with the need to pour sloped floors to accumulate the solids at the pump location. This would result in some additional tank work at every septic tank within Yacolt that would not be the case for STEP or STEG systems (drop in filter baskets, no in water work).
- Vacuum systems would require the installation of all new vacuum pits, potentially re-plumbing of house lines to these pits with abandonment of existing septic tanks and potentially the need for vacuum stations. Singel vaults could be used for multiple houses.
- STEP systems would benefit from current upgrades to tanks that have been performed in the past.
- STEP, STEG and Vacuum systems all warrant odor control measures.
- STEG systems should be the cheapest installation using existing tanks. Yacolt has already prepared for the potential of STEP/STEG (or grinder) systems with their addition of inspection risers to current septic tanks.
- STEG system slopes would need to be reviewed to determine that there is enough natural slope to install smaller lines, or else costs would go up with possible deeper installations.
- STEG system installation and gravity installations would 'drive' the treatment location to the lowest point in the valley.
- On site work would be less for STEP/STEG systems in comparison to grinders or vacuum systems; however grinders and vacuum could use smaller vaults/tanks.
- Vacuum cost estimates are suspect and difficult to analyze based on unknowns and additional work items. Additional costs have been added to the manufacturers cost estimate.

On a purely collection system approach, STEG system installations seem to be the least expensive initial selection if pipe sizing and slopes is are able to keep the installation depths shallow. Otherwise, STEP systems would seem to offer the best opportunity to take advantage of existing efforts to date.

### Local (Washington) Existing Users

Gravity – Clark Regional Wastewater, Battle Ground, City of Vancouver

STEP – Clark Regional Wastewater
Rick Nelson, Maintenance Manager, 360-993-8831
City of Camas
Monte Brachman, Public Works Director, 360-817-1560

STEG – City of Camas
Monte Brachman, Public Works Director, 360-817-1560

Vacuum – City of Ocean Shores
Marshall Read – Collection systems, 360-289-2754

Grinder – Clark Regional Wastewater
Rick Nelson, Maintenance Manager, 360-993-8831

13 October 2008

# Town of Yacolt Technical Memorandum No. 02 (Draft)

**Prepared For:** Joe Warren, Mayor
Paul Tester, Town of Yacolt
Pete Roberts, Town of Yacolt

**Submitted by:** Chuck McDonald, Kennedy/Jenks Consultants

**Subject:** Treatment Technologies for the Town of Yacolt
Town of Yacolt General Sewer Plan
KJ No. 0891009*00

## Yacolt General Sewer Plan

The Town of Yacolt (Town) is estimated to have maximum monthly flows of 0.19 million gallons/day (MGD) in 2010 and 0.29 MGD in 2030 based on population growth projections and Ecology's flow value recommendation (100 gallons per capita per day - gpcd). Based on Ecology's recommendation of 0.2 lb/day per capita for Total Suspended Solids (TSS) and Biochemical Oxygen Demand (BOD), the Town is estimated to produce wastewater with influent loadings of 384 lb/ in 2010 and 574 lb/day in 2030.

**Table 1: Town of Yacolt: Flow and Waste Loading Projections**

| | Max Month Flow, MGD | BOD, lb/day | TSS, lb/day |
|---|---|---|---|
| 2010 | 0.19 | 384 | 384 |
| 2030 | 0.29 | 574 | 574 |

The Town is looking at multiple options for treatment technologies. Some relevant secondary treatment technology options are:

1. Suspended Growth Treatment System
    a. Conventional Activated Sludge
    b. Sequencing Batch Reactor (SBR)
    c. Oxidation Ditch
    d. Membrane Bioreactor
    e. Packaged Systems (Aeromod)
2. Fixed Film Treatment System
    a. Recirculating Media Filters
    b. Orenco Systems: Advantex
3. Lagoon Systems
    a. Biolac
4. Pump station(s) and pressure main that transport wastewater to the closest treatment facility (City of Battle Ground).

Of this list, Conventional Activated Sludge, Recirculating Sand/Gravel filter, Biolac, Aeromod Packaged system, Orenco's Advantex filters, and Membrane Bioreactor have been analyzed to determine the recommended technology based on capital cost, operational flexibility, long term Operations and Maintenance (O&M) costs, and discharge alternatives. The discharge options are discussed in detail in Technical Memo No. 3. Discharge Alternatives.

**Conventional Activated Sludge**

Conventional Activated Sludge (CAS) is an aerobic treatment process that uses a suspended microorganism biomass to convert biodegradable organic compounds and nutrients in wastewater into easily removable byproducts. This type of system relies heavily on the physical removal of solids and the biological uptake of organic material to drive the treatment processes. Activated sludge biomass converts dissolved organic constituents into gas and additional biomass. The aerobic portion of the activated process converts ammonia to nitrate. The addition of an anoxic reactor to the activated sludge process can complete the biological nitrogen removal by converting nitrate to nitrogen gas.

In the CAS process, wastewater typically enters the plant through a screen to remove large solids and floatable items for preliminary treatment. Following screening, wastewater flows to a primary clarifier for removal of settleable solids. The primary-clarified wastewater then flows to an aeration basin, where air is introduced to a mixture of wastewater and microorganisms (mixed liquor). However, for small plants like Yacolt, primary treatment is not provided, rather only preliminary treatment is provided prior to secondary treatment. The microorganisms in the mixed liquor absorb dissolved and suspended components of the wastewater and multiply, creating more mixed liquor solids. The mixed liquor is then conveyed to a secondary clarifier, where the microorganisms settle and can be removed as a concentrated sludge. A portion of the sludge is re-circulated to the aeration basin, and the remaining sludge is removed from the clarifier and pumped to a solids handling facility, where it is processed for disposal. For surface water discharge or reclaimed water use, the secondary effluent must be disinfected chemically or via ultraviolet light.

Small communities that employ CAS treatment technology frequently use package treatment plants. Packaged treatment plants significantly reduce the costs to construct individual components such as aeration basins and clarifiers because they use common-wall construction and can be shop fabricated. Package treatment plants are offered utilizing a variety of activated sludge treatment technologies and achieve a high quality effluent.

Septic tank effluent delivered via a STEP collection system typically has high concentrations of ammonia, resulting in the potential for an inconsistent nitrification process. As a result, an activated sludge treatment system for this application requires a

strict sampling and monitoring schedule and a skilled operator to ensure consistent effluent quality. Biosolids generated from the treatment process will require management, either through stabilization, dewatering and disposal or storage with contracted dewatering, hauling and disposal.

Also, if a STEP collection system is employed, the raw wastewater may have insufficient organic and nutrient contact to support a healthy sludge for the process. This could affect denitrification processes due to lower BOD. However, the City of Yelm (Washington) uses a STEP collection system and a Suspended Growth Treatment System (SBR) and has not reported any significant problems.

Based on a planning level cost estimate of $10/gallon for a CAS system, the capital cost of a CAS with capacity to treat 0.29 MGD is estimated at $ 2.9 million. An additional $1.5 million will be included for Land acquisition, Site work, building (lab and maintenance), disinfection, and solids storage/treatment (sludge lagoon). Therefore, the total capital cost for a 0.29 MGD CAS system is estimated to be $4.4 million. The O&M cost for a 0.29 MGD CAS System is estimated to be $60,000 per year.

**Biolac Lagoon Systems**

Biolac is an activated sludge process using an extended solids retention time (SRT). Biolac utilizes an earthen basin with an integral clarifier (proprietary system) for secondary clarification. Earthen basin construction with integral clarification results in reduced capital costs. Aeration and mixing are provided using suspended, moving fine bubble diffuser aeration chains. The relatively long sludge age for the Biolac system produces lower quantities of partially digested waste activated sludge. Long sludge age and hydraulic retention time results in high quality effluent including nitrification at low wastewater temperatures. Moving aeration chains provide efficient oxygen transfer and reduce the mixing energy requirement. Biological nutrient removal (BNR) can also be achieved in Biolac by simple control of the air distribution to the moving aeration chains, which creates moving waves of oxic and anoxic zones known as Wave-Oxidation. The alternating aeration pattern allows both anoxic and aerobic zones in a single basin, allowing for denitrification. Phosphorus removal is achievable with the addition of a pre-anaerobic zone.

Based on a planning level cost estimate of $5/gallon for a Biolac system, the capital cost of a Biolac with capacity to treat 0.29 MGD is estimated at $ 1.5 million. An additional $1.5 million should be included for Land acquisition, Site work, building (lab and maintenance), disinfection,, and solids storage/treatment (sludge lagoon). Therefore, the total capital cost for a 0.29 MGD Biolac system is estimated to be $3.0 million. The O&M cost for a 0.29 MGD Biolac System is estimated to be $60,000 per year.

**Figure 1: Biolac Lagoon Systems (Courtesy: Parkson Corporation)**

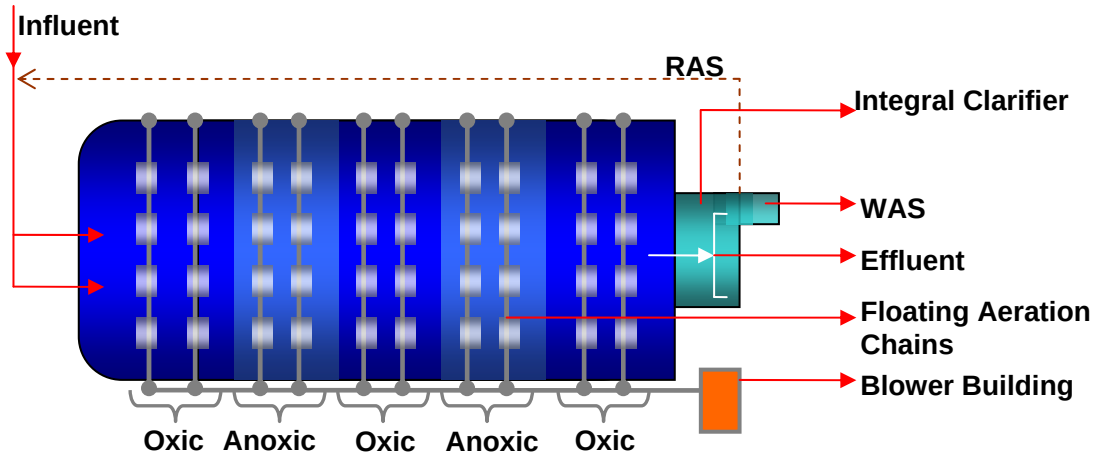


Activated sludge processes such as oxidation ditch, SBR, and extended aeration would require substantially more structural work and capital investment for the larger structures associated with these processes compared to that of a Biolac system. Biolac offers simpler construction and is another cost effective alternative. It requires a larger foot print compared to the other treatment technologies described in this memo. A sludge lagoon would be necessary for storage of waste activated sludge. The capital cost is expected to be lower than that of a conventional activated sludge treatment system.

**Aeromod's Sequox**

The Aeromod's SEQUOX is packaged biological nutrient removal activated sludge process that offers the benefits of sequencing aeration with continuous clarification. The process allows for effective denitrification and is capable of low levels of effluent Total Nitrogen and Phosphorus. SEQUOX incorporates a selector tank to provide preconditioning of raw wastewater to inhibit filamentous growth. The selector tank promotes improved solids settling. It has no moving parts below the water surface. It offers relatively simple operation and has a small footprint.

**Figure 2: SEQUOX BNR Process (Courtesy: Aeromod)**

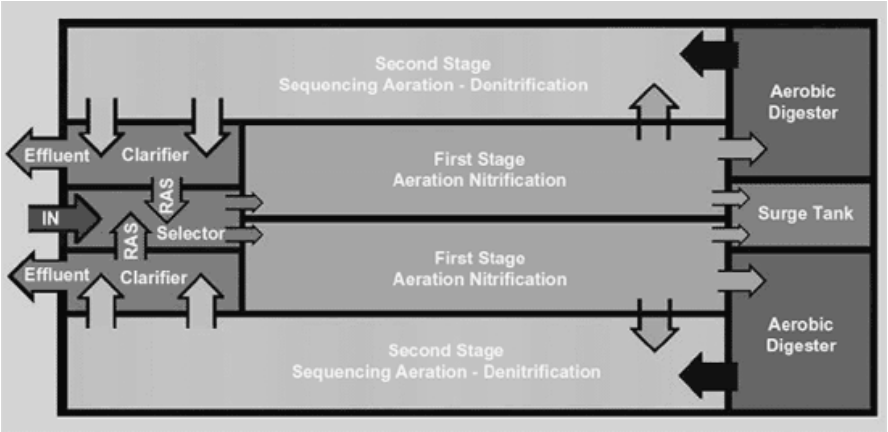


The capital cost is expected to be lower than that of a conventional activated sludge treatment system because is a packaged system. It's cost is comparable to that of a Biolac system. However, due to the increasing concrete costs, SEQUOX could be more expensive.

Based on a planning level cost estimate of $6.5/gallon for an Aeromod system, the capital cost to treat 0.29 MGD is estimated at $ 1.8 million. An additional $1.5 million should be included for Land acquisition, Site work, building (lab and maintenance), disinfection,, and solids storage/treatment (sludge lagoon). Therefore, the total capital cost for a 0.29 MGD BNR system is estimated to be $3.3 million. The O&M cost for a 0.29 MGD BNR System is estimated to be $60,000 per year.

**Recirculating Media Filters**

A Recirculating Media Filter (RMF) is used to treat septic tank effluent, which is subject to clarification, by filtering it through a medium of coarse sand, gravel, peat, or manufactured media taking advantage of naturally occurring microbes. Gravel or sand filters are typically used only with septic tank effluent. They may not be suitable for grinder pump or gravity collection. Of the different kinds of media available, sand is the most reliable and widely used medium. RMFs function simultaneously as aerobic, fixed-film bioreactors and physical straining filters. Dissolved organic material is consumed and aerobically degraded by microorganisms on the filter bed. Physical removal of TSS occurs as the filter media strains solids from the liquids, while the wastewater re-circulates and percolates through the filter medium multiple times, allowing continued filtering and increased bacterial decomposition.

Wastewater flows into a recirculation tank, where mixing and natural biochemical treatment takes place. Pumps in the recirculation tank deliver the wastewater to the sand/gravel filter bed through a distribution piping system in scheduled timer-controlled doses. The wastewater is allowed to percolate through the media where it undergoes

biological treatment. The contaminants are broken down by naturally occurring microorganisms living on the sand particles. The under-drain located below the filter media collects the filtered effluent and returns it to the recirculation tank. The filter material may or may not be installed in a water tight liner or container, depending on area groundwater impacts. At the recirculation tank, the filtered effluent is mixed with the incoming septic tank effluent. Effluent is pumped through the filter and then back to the recirculation tank repeatedly. After the effluent has passed through the filter and recirculation tank several times, the treated wastewater is ready for discharge. For surface water discharge or reclaimed water use, the effluent must be disinfected**.**

**Figure 3: Recirculating Media Filter**

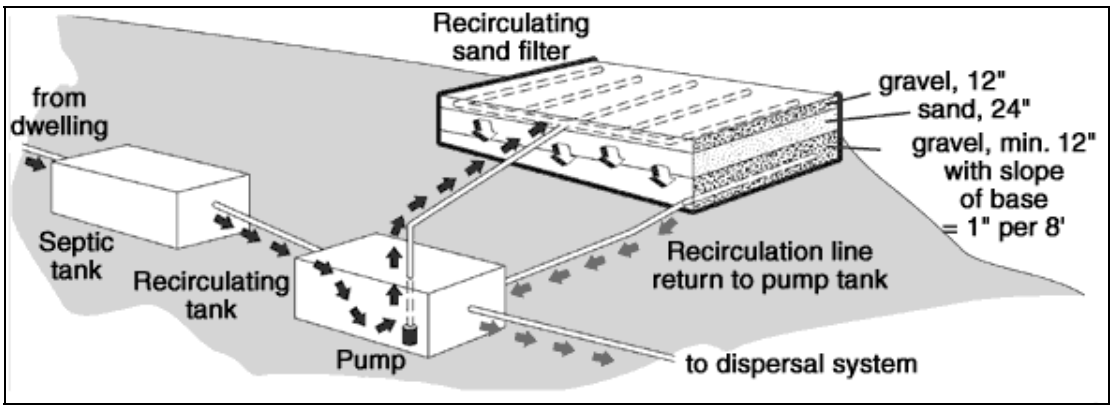


The treated effluent can be distributed subsurface in a shallow drainfield for polishing and disposal or, disinfected for reuse or surface discharge. Depending on the site, final polishing treatment and discharge could be drainfield trenches, a constructed mound drainfield, or drip distribution. Specific effluent disposal options for the Town of Yacolt are discussed in the Disposal Alternatives Technical Memorandum.

As with the other secondary process circulation system it is capable of biological removal of nitrogen. As wastewater moves through the filter and becomes oxygenated, ammonia is transformed into nitrate. In the recirculation tank, conditions are anoxic (low in dissolved oxygen) and bacteria breaks down nitrates and releases nitrogen back to the atmosphere (i.e. denitrification).

RMF's with sand/gravel media have a lower capital cost compared to RMF's with synthetic media. The space requirements for sand/gravel RMF's are somewhat greater than the synthetic fabric system. However, they are a viable alternative because of the simple design and construction and the ability to handle higher strength waste. Also, if

the space is available, the simplicity of operation may be an acceptable trade off over synthetic filters.

The most significant operational issue for an RMF system is bio-fouling. As filter media ages, the biofilm on the media grows thicker, thereby reducing the effective area for percolation and the media bed's hydraulic loading capacity. In such cases, the upper layer should be removed and replaced with new media. Adding air to the system and providing periodic purging/sparging may minimize this problem. Proper operation of the RMF system is required to reduce biofouling and ensure infrequent maintenance events. Although the synthetic filters are easier to maintain compared to sand/gravel filters, gravel media are more robust and require less frequent maintenance. A maintenance contract is strongly recommended. Maintenance includes inspecting flow meters, pumps, recirculation tank, recirculation pump, distribution systems, media and effluent quality, lab testing and cleaning and repairing when needed.

Based on a planning level cost estimate of $10/gallon for a RMF (sand/gravel) system, the capital cost of a RGF (sand/gravel) with capacity to treat 0.29 MGD is estimated at $ 2.9 million. An additional $1.5 million should be included for land acquisition, site work, building (lab and maintenance), disinfection,, and solids storage (sludge lagoon). Therefore, the total capital cost for a 0.29 MGD RGF (sand/gravel) system is estimated to be $4.4 million. The O&M cost for a 0.29 MGD RMF (sand/gravel) System is estimated to be $60,000 per year.

Additional costs may be incurred for shipping of media if the soils in Yacolt are not suitable for RMF (sand/gravel), thereby increasing capital costs.

**Orenco Systems: AdvanTex**

The AdvanTex Treatment System is a fully engineered synthetic fabric media system that is purchased as a complete modular package. It is the most commonly used synthetic media filter in Oregon, manufactured by Orenco Systems, and works similar to that of a Recirculating Media (sand/gravel) Filter. Synthetic media is commonly used in RMF's because of its longevity and effectiveness. It comes as a totally pre-manufactured package, including AdvanTex textile filter, tanks, Biotube pumping package, and control panel.

The system includes a processing tank and a control panel with a programmable timer (appropriately sized tankage and timed dosing) for even, steady wastewater treatment, even under peak conditions. The system also includes the AdvanTex textile filter, a sturdy, watertight fiberglass basin filled with an engineered textile material. This lightweight, highly absorbent material treats large quantities of wastewater in a smaller space then a traditional RMF (sand or gravel media). It processes and discharges small amounts of treated wastewater throughout the day, thereby avoiding surges.

Apart from BOD/TSS removal, the wastewater also undergoes biological removal of

nitrogen. Within the filter, aerobic conditions exist that are ideal for microbes that convert ammonia to nitrate (nitrification). AdvanTex filters can be configured so that the filtrate re-circulates back to the high-carbon, low-oxygen environment at the inlet end of the processing tank, which is ideal for microbes that reduce nitrates to nitrogen gas (denitrification).

Recirculation can be configured to favor maximum nitrogen removal. As with the other treatment technologies, ability to remove nitrogen is an advantage in areas like Yacolt where nitrogen impact might be a concern.

**Figure 4: AdvanTex Systems (Courtesy: Orenco)**

The effluent can be distributed subsurface in a shallow drainfield for polishing and disposal or, disinfected for reuse or surface discharge. Effluent disposal options for the Town of Yacolt are discussed in the Disposal Alternatives Technical Memorandum.

AdvanTex systems enable individual modules to be isolated and cleaned without requiring a complete system shutdown and they require less space compared to sand/gravel filters.

Based on a cost quote from Orenco, the capital cost of an AdvanTex System with capacity to treat 0.14 MGD is estimated at $ 1.5 million (10% contingencies, 5% legal, and 15% engineering). Based on this quote, the capital cost of an AdvanTex System with a capacity of 0.29 MGD is estimated at $3.1 million. An additional $1.5 million should be included for land acquisition, site work, building (lab and maintenance), disinfection,, and solids storage (sludge lagoon). Therefore, the total capital cost for a 0.29 MGD AdvanTex system is estimated to be $4.7 million. The O&M costs for a 0.29 MGD AdvanTex System is estimated to be $60,000 per year and include Component Maintenance, System Maintenance, Pumping and Electrical costs.

Maintenance is relatively simple and a periodic maintenance schedule (quarterly to annually) like an onsite septic system is recommended. AdvanTex Treatment Systems can be equipped with Control Panels that automatically notify service providers of irregular conditions. The systems are normally sized to allow for a minimum of 24 hours of wastewater storage, at average daily flows. This allows operators to provide service during normal working hours.

**Packaged Membrane Plants**

A Membrane Bioreactor (MBR) system combines the biology of an activated sludge process with membrane filtration to provide effluent quality that meets the most stringent standards for effluent reuse. An MBR system is often the preferred treatment process where effluent reuse is the desired goal. The MBR system employs a suspended microorganism biomass to convert biodegradable organic compounds and nutrients in wastewater into more biomass. The biomass is separated from the wastewater using a membrane filter (rather than the gravity settling in a conventional activated sludge process).

A packaged membrane plant is a pre-engineered integrated membrane bioreactor package that consists of a Flow Equalization tank, Fine screen, Anoxic basin, Pre-Air basin, Membrane Bioreactor basins, a membrane cleaning system, disinfection system, system control (PLC), and Waste Activated Sludge (WAS) handling (available separately in the market).

**Figure 5: Packaged Membrane Systems (MBR) (Courtesy: Enviroquip)**

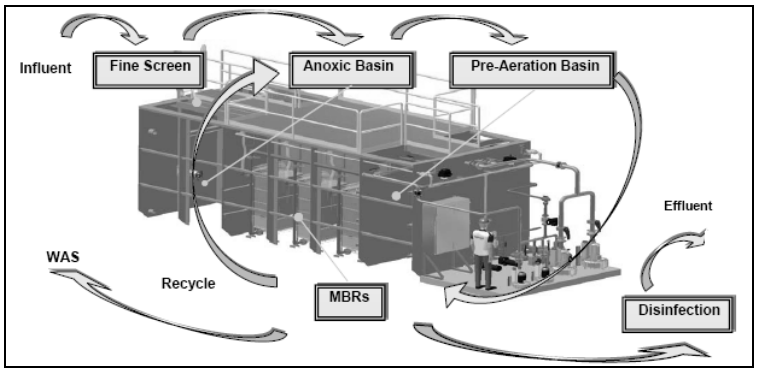


The flow equalization tank accepts the plant influent and ensures that a uniform and consistent flow is delivered to the treatment processes. The influent then passes through an automatic fine screen before entering the anoxic basin, where the nitrates, recycled from the MBR's, are converted to nitrogen gas. The resulting liquor is transferred to the Pre-air basin where fine bubble aeration is used to provide oxygen for carbonaceous BOD removal and conversion of ammonia to nitrates. The partially stabilized biomass

then flows to the MBR's, where integral air diffusers mix the influent and allow further of ammonia to nitrates by delivering supplemental oxygen to the biological system. The membranes filter the treated wastewater to remove particulate matter and also provide a positive barrier to pathogens. The permeate is disinfected and discharged, whereas the thickened biomass is recycled to the anoxic basin. The waste sludge is removed on a regular basis and stored. The effluent has to be disinfected for reuse or surface discharge. Effluent disposal options for the Town of Yacolt are discussed in the Disposal Alternatives Technical Memorandum.

The MBR systems have a relatively small footprint when incorporated in a complete treatment plant and produce very high quality effluent. As it is modular, it is easily expandable allowing additional tanks or membrane units to be added for future flow increases. Small quantities of highly mineralized and stabilized sludge are produced (typically about 40 days sludge age employed). The moderate amount of sludge generated can be stored short-term/long-term and land applied.

If a STEP collection system is employed, the raw wastewater may have insufficient organic to support denitrification and nutrients to support a healthy sludge. However, the City of Yelm (Washington) uses a STEP collection system and an (SBR) and has not reported any significant problems.

MBR plants for small communities are provided as packages that can be shop fabricated and delivered more cost-effectively than a site-built treatment plant.

Based on a planning level cost estimate of $15/gallon for a membrane bioreactor system, the capital cost of an MBR with capacity to treat 0.29 MGD is estimated at $ 4.4 million. An additional $1.5 million should be included for land acquisition, site work, building, and solids storage (sludge lagoon). Therefore, the total capital cost for a 0.29 MGD MBR system is estimated to be $5.9 million, which is more expensive than other on-site systems discussed in this memo. Although the MBR plants are typically automated, the greater quantity of motorized equipment and high degree of automation requires more preventative maintenance, and a higher level of operator sophistication and certification. The overall O&M costs are in the range of $120,000 per year and include Labor and Administration, Biosolids handling, Electrical, Chemical, and Replacement and Repair.

MBR basins have integral air scour diffusers that have the ability to use membrane scour air within the basins to maintain the membranes. The expected membrane life is up to 10 years of continuous operation. Periodic (6 months) chemical cleaning of the membrane unit is recommended. Components of the system have to be taken offline for 4 to 8 hours after which normal operation is resumed. An annual inspection (cleaning and visual inspection) of the membrane unit manifolds is also recommended.

**Pump Station and Pressure main**

Pump station(s) and transmission pressure mains that transport wastewater from the Town of Yacolt to the City of Battle Ground is the other possible option for Yacolt. This option has been discussed in detail in Technical Memo No.4 -Transmission.

## Recommendations

The alternatives are evaluated based on:

- Ability to meet public health and environmental protection requirements
- Capital Costs
- Operation and Maintenance skill requirements
- Other concerns

The SBR and Oxidation Ditch alternatives were not evaluated in detail in this treatment memo. One main disadvantage in these two technologies is the large upfront cost involved die to the substantial degree of structural concrete required to meet future flows and loads. Alternately, modular package systems like Aero-mod, packaged MBR systems, etc meet current flows with additional modules added flow and loadings increase. The high frequency of maintenance and operation process complexity in SBR plants is another disadvantage. In addition the slug flows associated with SBRs are not favorable to indirect discharge applications.

Tables 2, 3, and 4 display the design considerations and ratings for each of the process evaluated in this memo. All six treatment technologies would be expected to produce effluent of sufficient quality, with some better than others. Even though CAS and MBR are capable of achieving higher quality effluent, other parameters like capital costs, O&M costs, and maintenance requirements make them a less viable financial option

A Biolac and an Aeromod Sequox system are also capable of provide high quality treated effluent at an effective cost. Due to the high amount of rainfall in the Town of Yacolt, these systems have to be sized to accommodate the rain events and therefore, might not be the most suitable option. Even though this is a disadvantage, due to the other benefits that these technologies offer, they will be reviewed further.

**Table 2: Technology Application**

| Technologies | Applications: Removal of… | | | | |
|---|---|---|---|---|---|
| | C-BOD | Phosphorus | Ammonia (Nitrification) | Nitrogen (Denitrification) | TSS (Solids–Liquid Separation ) |
| **CAS** | ✓ | | ✓ | | |
| **RMF (sand/gravel)** | ✓ | | ✓ | ✓ | ✓ |
| **AdvanTex** | ✓ | | ✓ | ✓ | ✓ |
| **MBR** | ✓ | ✓ | ✓ | ✓ | ✓ |
| **Biolac** | ✓ | ✓ | ✓ | ✓ | |
| **Aeromod's SEQUOX** | ✓ | ✓ | ✓ | ✓ | |

**Table 3: Treatment Technology Summary**

| | Space Requirements | Simplicity | Operator Maintenance Skill Level | Operator Process Skill Level | Sludge Management | Effluent Quality | Capital Cost, $M | O&M cost, $ |
|---|---|---|---|---|---|---|---|---|
| **CAS** | Medium | Moderately Complex | Medium | High | Solids handling and disposal required. | High quality. Filter required for reuse. | 4.4 | 150,000 |
| **RMF (sand/gravel)** | High | Simple | Low | Low | No routine solids handling | Adequate for subsurface discharge | 4.4 | 150,000 |
| **AdvanTex** | Medium | Moderate | Low | Low | No routine solids handling | Adequate for subsurface discharge | 4.7 | 150,000 |
| **MBR** | Low | Complex | High | Medium | Solids handling and disposal required. | Extremely high quality | 5.9 | 180,000 |
| **Biolac** | High | Simple | Low | Medium | Solids handling and disposal required. | High quality | 3.0 | 120,000 |
| **Aeromod's SEQUOX** | Medium | Moderate | Low | Medium | Solids handling and disposal required. | High quality | 3.3 | 120,000 |

## Table 4: Ratings-Impacts

| | BOD/TSS/ Ammonia removal | Fecal Coliform | Space Requirements | Maintenance/ Inspection - Ease | Maintenance/ Inspection - Frequency | Labor (# of people needed, time, etc) | Capital Cost | O&M cost | Effluent Quality | Points |
|---|---|---|---|---|---|---|---|---|---|---|
| **CAS** | + | + | 0 | - | - | - | + | + | + | 20 |
| **RMF (sand/gravel)** | 0 | 0 | 0 | + | + | + | + | + | 0 | 23 |
| **AdvanTex** | 0 | 0 | 0 | 0 | + | + | 0 | 0 | 0 | 20 |
| **Membrane** | + | + | + | - | 0 | 0 | - | - | + | 18 |
| **Biolac** | + | + | - | 0 | 0 | 0 | + | + | + | 23 |
| **Aeromod's SEQUOX** | + | + | 0 | - | - | - | + | + | + | 20 |

Ratings + = Positive (3); 0 = Neutral (2); - = Negative (1)

12 November 2008

# Town of Yacolt Technical Memorandum No. 03 (Draft)

**Prepared For:** Joe Warren, Mayor
Paul Tester, Town of Yacolt
Pete Roberts, Town of Yacolt

**Submitted by:** Chuck McDonald, Kennedy/Jenks Consultants

**Subject:** Effluent Discharge Alternatives for the Town of Yacolt
Town of Yacolt General Sewer Plan
KJ No. 0891009*00

This technical memorandum addresses effluent discharge alternatives that could be incorporated in the proposed wastewater collection, treatment, and discharge system for Yacolt, Washington. Alternatives for discharge have been identified based on reconnaissance evaluations of local climate, surface water hydrology, hydrogeology, topography, and soils. Discharge alternatives are evaluated primarily on hydrologic feasibility with some discussion of other technical and regulatory factors.

## Proposed Wastewater Management System

Proposed Design Flows and Water Quality. The current wastewater flows in Yacolt are estimated to be 140,000 gallons per day (gpd) and the design build-out flow is 1.27 million gallons per day (mgd). Influent, based on anticipated flow from septic tank effluent pumping (STEP)/septic tank effluent gravity (STEG) systems, to a treatment plant would likely have these water quality properties: 200 mg/l biochemical oxygen demand (BOD), 100 mg/l total suspended solids (TSS), and 30 mg/l total nitrogen.

## Physical Conditions in the Yacolt Valley

Climate. Long term records for weather stations to the north of the Yacolt valley have average annual precipitation amounts between 70 and 76 inches (Figure 1). Rain gauges in the Yacolt Valley often record annual precipitation of 85 inches or greater (Paul Tester, personal communication).

For six months of the year, monthly precipitation averages greater than seven inches per month. During this period, high groundwater levels may restrict discharge to the soil or subsurface.

During the drier months (June through September), evaporative demand exceeds rainfall in most years. During this season, discharge to either surface water or groundwater is feasible and likely to be beneficial during dry years. During the summer season, supplemental irrigation or rain of between 14 and 20 inches is needed for maximum crop production.

Surface water. Outflows from the Yacolt Valley are to the East Fork of the Lewis River to the south and Cedar Creek (ultimately the North Fork Lewis River) to the north (Figure 2). Three major creeks flow north to south through the valley: Yacolt Creek flows south along the western

margin of the valley floor, Big Tree Creek and Weaver Creek drain the north east and eastern portions of the valley. The confluence of these creeks is in the southern part of the valley approximately one mile from the East Fork of the Lewis River. In this area, the valley is quite wet. There are wetlands along each creek in this area.

Geology and Groundwater Conditions. The U. S. Geological Survey map for the Yacolt area shows that the valley floor sediments are glacial outwash deposits which consist of poorly consolidated pebbly to cobbly gravel to sand, with clay layers and discontinuous deposits throughout the valley. Based on well logs on file with the Washington Department of Ecology (Ecology), the subsurface is dominated by clay and clay mixtures, to depths generally ranging between 5 and 30 feet. Deeper material in the area tends to be rocky or sandy. Patterns for the depth and thickness of this clay layer were not evident from well log descriptions.

The soil survey for the Yacolt area shows that silt loam soils overlying the glacial outwash textures predominate in the top five feet of soil for much of the valley. Some areas along Yacolt, Weaver, and Cedar Creeks, and along the railroad tracks, have loam to stony loam soil textures. These may be well suited for discharge if deeper subsurface conditions are also suitable.

Depth to groundwater ranges from a few feet to more than 100 feet below ground surface (bgs) depending on location and season. The shallow groundwater occurs in the southern portion of the valley and the deeper groundwater is in the north. The Town's water supply wells are completed at approximately 100 feet below ground surface (bgs) and are just north of the developed area of town.

## Effluent Discharge Alternatives

There are three classes of effluent discharge considered in this evaluation: surface water discharge, discharge to groundwater (discharges to the soil or subsurface fall into this category), and discharge to another wastewater treatment system. Key factors including local environmental conditions, regulatory requirements, public opinion, and cost are used to assess the suitability of each alternative. The following specific effluent discharge alternatives were evaluated for the Town of Yacolt:

1. Large On-Site Sewage Systems (LOSS)
2. Surface irrigation with winter effluent storage
3. Subsurface discharge to groundwater
4. Direct discharge to surface water
5. Indirect subsurface discharge to surface water
6. Pipeline to a remote treatment facility

Large On Site Sewage Systems


© Kennedy/Jenks Consultants, Inc.

Large On-Site Sewage Systems (LOSS) are permitted by Department of Health (RCW 70.118B) and are restricted in size from 3,500 gallons/day to 100,000 gallons/day. A single LOSS system would, therefore, not be a viable stand-alone alternative for Yacolt. In addition, drainfield regulations restrict uses of drainfields to domestic discharge only.

Table 1 shows estimates of the drainfield size requirements for a LOSS. While current flows could be discharged in a 14 acre drainfield, as much as 120 acres would be required to implement this discharge system for the projected build-out flow. Additional acreage must also be reserved for use as a replacement area in the future.

The local public school (an elementary school in the Battle Ground School District) does have an existing drainfield discharge system that could be incorporated into the Town's system if the School District was part of the Town's wastewater system. Requirements within the Clark County 2004 GMA update do not make allowances or anticipate the use of a LOSS in Yacolt.

**TABLE 1. Preliminary Sizing Estimates for Subsurface Discharge Systems[1] based on loading rates**

| **Design flow, gpd:** | **150,000** | | |
|---|---|---|---|
| **Discharge Area Requirements (25% added)** | | **Design discharge flow** | |
| Drainfield area, Ac: | **14** | 3 | gpd/lf |
| | **9** | 5 | gpd/lf |
| Subsurface discharge length, lf: | **1,880** | 100 | gpd/lf |
| | **630** | 300 | gpd/lf |

| **Design flow, gpd:** | **1,250,000** | | |
|---|---|---|---|
| **Discharge Area Requirements (25% added)** | | **Design discharge flow** | |
| Drainfield area, Ac: | **120** | 3 | gpd/lf |
| | **70** | 5 | gpd/lf |
| Subsurface discharge length, lf: | **15,600** | 100 | gpd/lf |
| | **5,200** | 300 | gpd/lf |

[1] These estimates include an additional twenty five percent land area. No reserve area is included.

## Agricultural and Landscape Irrigation


© Kennedy/Jenks Consultants, Inc.

Irrigation opportunities in the Yacolt area are limited both by the low irrigation requirement (14 to 20 inches per year) and the high annual precipitation. Annual precipitation has a direct impact on storage volume required to hold treated effluent from approximately October through May when the irrigation season begins. In Table 2, estimates of sprayfield acreage and storage volume are shown for current and design flows. The values are based on estimated storage requirements and soil water balances that account for summer irrigation, irrigation efficiency, percolation through soils, and precipitation minus evapotranspiration for both the storage surface area and irrigation areas. It is likely that neither the large acreage necessary nor the very large effluent storage requirements are practical for Yacolt.

**Table 2. Land Application Size Requirements**

| | 14 inch/year irrigation requirement | | 20 inch/year irrigation requirement | |
|---|---|---|---|---|
| **Design effluent flow mgd** | **Irrigated Acreage** | **Approximate storage volume, MG** | **Irrigated Acreage** | **Approximate storage volume, MG** |
| 0.15 | 150 | 55 | 110 | 55 |
| 1.27 | 1,300 | 480 | 800 | 400 |

Subsurface discharge

Subsurface discharge techniques can be used to discharge treated effluent to groundwater or, indirectly, to surface water. In practice, effluent discharge to the subsurface can be selected when subsurface hydraulic properties and groundwater levels are suitable. In a small basin like the Yacolt Valley, it is often the case that surface waters provide the primary drainage on an area-wide basis. The primary differences between subsurface discharge to groundwater and indirect discharge to surface water are related to regulatory requirements.

**Subsurface discharge to Groundwater.** Opportunities for groundwater discharge using techniques such as drainfield discharge or rapid infiltration basins are limited in the Yacolt Valley. Key local area limitations include a) the location of the Town's drinking water supply in the north end of the valley and b) the shallow groundwater and wetlands water levels in the southern portion of the valley. In the north, public health concerns would have to be addressed. In the south, the capacity for groundwater discharge is limited by shallow groundwater conditions. Subsurface discharge techniques could, however, be useful for part of the flow or for discharge during the dry seasons.

**Indirect Discharge to Surface Water**. In the Yacolt Valley there are a number of opportunities to make use of indirect discharge of treated effluent. The East Fork of the Lewis River lies just south of the valley and three creeks flow through the valley and discharge to the East Fork.


© Kennedy/Jenks Consultants, Inc.

In addition, Cedar Creek, at the north end of the valley, also drains northwest to the North Fork of the Lewis River.

Either of these surface water bodies has capacity to accept additional flows (The design flows projected for Yacolt (0.15 mgd = 0.24 cfs; 1.27 mgd = 2 cfs) are small in comparison to surface water flows.

Table 3 summarizes reconnaissance evaluations of potential indirect discharge locations in the Yacolt Valley.

**Table 3 - Indirect Discharges – Sites & Benefits**

| Location | Site Features | Discharge Benefits |
|---|---|---|
| **Yacolt Creek** | Flows south along the western valley margin. In the north adjacent to the school, conditions are suitable for discharge, vacant property available. | Dry season water supply would be beneficial to the East Fork and Yacolt Creek. |
| **Yacolt (Battle Ground) Elementary School** | Soil and groundwater conditions are similar to those along Yacolt Creek; existing drain field appears to operate satisfactorily | This existing system could take a portion of the total load; the system could be expanded if higher level treatment is incorporated. |
| **Confluence of Yacolt, Big Tree, and Weaver Creeks** | Soil conditions are adequate but groundwater depth is a key limitation | This location is down-gradient from Yacolt; a wetlands enhancement project could be incorporated |
| **The Central Valley** | Clay soils throughout the central portion of the valley will limit subsurface discharge. An exception is the area of loamy and stony soils along the railroad track right of way. | This location is down-gradient from Yacolt; a wetlands enhancement project could be incorporated |
| **Areas North of the City Recreational Area and South of Cedar Creek** | A groundwater divide lies in this area; areas north of the divide would flow to Cedar Creek. The site is upgradient from the Town. | No existing TMDL requirements |


© Kennedy/Jenks Consultants, Inc.

**Water Quality Benefits of Subsurface Discharge.** Soil treatment or polishing of effluent has been used in a variety of locations. Use of soil for treatment has generally resulted in some groundwater impacts. When used for polishing, subsurface discharge is quite effective, especially for temperature reduction. This is an advantage of indirect discharge systems: soil and groundwater cooling of effluent can be an effective way to meet temperature standards that are common throughout the Pacific Northwest. A benefit of developing a wastewater system for Yacolt is the ability to provide effluent treatment that will eliminate potential impacts from existing on-site systems.

**Subsurface Discharge System Sizing.** Table 1 provides estimates of system size for current and design wastewater flows. The information for subsurface systems is reported as 'lineal feet' because the most advantageous shape for the discharge approach is as a line discharge running perpendicular to the direction of groundwater flow. In this orientation, the best mixing with groundwater and temperature reductions occur. This design also minimizes groundwater mounding.

Higher discharge rates are appropriate for subsurface discharge since a) effluent has usually been treated to a higher level than that used for on-site septic tank – drainfield systems and b) groundwater mounding is minimized by use of a linear orientation. In practice, these rates are established based on local hydrologic conditions and site specific investigations are mandatory before system size and configuration can be determined. Based on general soil conditions alone, it is likely that a well designed subsurface discharge system for treated effluent will require 600 to 1,900 lineal feet of discharge trench/piping.

Direct discharge

Direct discharge into a local receiving body has limited potential for the Town of Yacolt. This results from the current process to establish Total Maximum Daily Loads (TMDL's) for the East Fork of the Lewis River. At this time there are several factors that cannot be determined: a) whether Yacolt could secure a load allocation; b) whether the wastewater treatment system could be designed to meet water quality limitations, primarily temperature; and c) if there is sufficient flow in the smaller creeks to provide dilution to treated effluent. At this time, it appears that indirect discharge would be suitable for summer/dry season discharge and direct discharge may be more appropriate during the winter months with higher stream flow.

Pipeline to a remote treatment facility

Partially treated or untreated effluent could be pumped to another location for treatment and discharge. While this would save direct treatment costs, it would result in the need for a pump station, pressure main and a willing partner to accept the flow. The closest possible discharge point would be the City of Battle Ground. Pumping would be approximately 14 miles with a crossing of the East Fork of the Lewis River required. It is likely that this alternative will be


© Kennedy/Jenks Consultants, Inc.

expensive and, in addition, will not accomplish the environmental objective of maintaining or increasing water flows higher in the Lewis River watershed.

## Summary and Recommendations

This memorandum provides a brief review of physical conditions in the Yacolt Valley. Based on this information, it appears that there are several viable alternatives for discharge of treated effluent. The discharge approaches that have the most promise are direct discharge to surface water, indirect discharge to surface water, and use of an existing drainfield with treated effluent. Since each of these has some limitations, it is possible that a system using more than one of these alternatives together will be beneficial. The next steps in discharge analysis should be a) evaluation of surface water discharge alternatives and the potential to meet water quality standards, including temperature and b) identification and evaluation of potential discharge sites.

For initial costing purposes, anticipating an indirect discharge installation, $500,000 will be used for the cost of this installation.


© Kennedy/Jenks Consultants, Inc.

13 November 2008

# Town of Yacolt Memorandum No. 04 (Draft)

**Prepared For:** Joe Warren, Mayor
Paul Tester, Town of Yacolt
Pete Roberts, Town of Yacolt

**Submitted by:** Chuck McDonald, Kennedy/Jenks Consultants

**Subject:** Transmission System for the Town of Yacolt
Town of Yacolt General Sewer Plan
KJ No. 0891009*00

## Purpose

The framework of the transmission system depends on whether treatment and discharge is local or is located outside of the basin. Based on the size of the service area, there will be no traditional transmission (trunkline) necessary unless the treatment facility is located outside of the current service area. While this could result, at this time the location of treatment and discharge is anticipated to be within the current urban growth area.

## Transmission Systems

The transmission system is not a part of the collection system; it is the component connecting the collection and the treatment systems. In a pressurized collection system application (STEP, STEG, Vacuum or Grinder), the transmission system would use the collection pressure mains. However, the transmission system, pump station or extension of the pressure mains to convert flow to the treatment plant. With a desire to try to reuse treated effluent within the service area, the initial recommendation would be to not transmit flow out of the basin. Costs to transmit the flow to a treatment facility out of the basin will be much more expensive than treating flow within the basin.

A Pump station(s) and transmission pressure main that transports wastewater from the Town of Yacolt to the City of Battle Ground is a possible alternative to a Yacolt treatment plant. While this technology is straightforward and traditional, it would necessitate an agreement with the downstream receiving agency (Battle Ground) and a County and City (Battle Ground) franchise/permit for use of the roadways. In addition, buy in to either a portion of the Clark Regional Wastewater District or City of Battle Ground capacity at the Salmon Creek Treatment Plant would also be necessary. These options have not been pursued in conjunction with this report. The anticipated pressure main route would be along existing public roads (Clark County and Battle Ground owned) or the existing railroad (Clark County owned). The highway route that was reviewed is approximately 14.4 miles in length and would probably require the need for two (2) separate pump stations. Based on preliminary sizing an 8” pressure main was used, but only a single pump station was included in the costing at this time. Cost estimates for the pressure

main and pump station are over $12 million without reviewing the need for private easements. In addition, operation and maintenance of the system would need to be determined. It is highly unlikely that the system would operate effectively due to the low flows generated in the system. In addition, odors would be generated due to the length and long residence time in the pressure main and pump station wetwell. There would also be costs incurred for Battle Ground to transmit the flow to the current County system.

| Item | Yacolt Plant | Pump Station/FM |
|---|---|---|
| Transmission | Included in collection system | PS & FM = $ 11,362,000.<br>BG costs – assume no buy in |
| Treatment | Plant = $ 4.3 m - $4.6m | SCTP - $15/gal = $ 2.3m |
| Discharge | Estimated = $700,000 | Included |
| O & M | Assume $ 150,000/yr | PS & FM = $46,000/yr<br>SCTP @ $0.22/gal=$45,000/yr |
| Total costs | Capital $ 4.3 m - $ 4.6 m<br>O&M $ 150,000/yr | Capital $1 m<br>O&M = $91,000/yr |

SCTP operating costs = $3,341,000/year. For 15 mgd= $0.22/gal @ 200,000 gpd
Battle Ground operating costs – to CRWWD - $52,000/year for .227 mgd = $0.23/gal

**From:** Beka Telles [mailto:btelles@ihdllc.com]
**Sent:** Thursday, July 15, 2010 8:36 AM
**To:** Chuck McDonald
**Cc:** 'Pete Roberts'
**Subject:** RE: RR discharge-Yacolt Wa - Section 35 - T5N, R3E and Section 02, T4N, R3E

Chuck,

The response from the Railroad Inspector was that as long as all the County's standard specifications are met there should be no issues.

Thank you,
Beka

**From:** Chuck McDonald [mailto:ChuckMcDonald@KennedyJenks.com]
**Sent:** Tuesday, July 13, 2010 3:17 PM
**To:** Beka Telles
**Cc:** Pete Roberts
**Subject:** RE: RR discharge-Yacolt Wa - Section 35 - T5N, R3E and Section 02, T4N, R3E

Beka

Sounds good, our big question initially is whether it is feasible that the Town could install the line in the right of way. We do not have the funds to submit and be rejected if it is going to be a no-go so we really need to know whether this type of installation is feasible.

Chuck McDonald, P.E.

Senior Civil Engineer
Northwest Construction Manager
Kennedy/Jenks Consultants
200 SW Market Street, Suite 500
Portland, Or 97201
503-423-4056 (direct)
503-295-4901 (fax)
503-327-5845 (cell)
503-295-4911 (main off)

**From:** Beka Telles [mailto:btelles@ihdllc.com]
**Sent:** Tuesday, July 13, 2010 9:49 AM
**To:** Chuck McDonald
**Subject:** RE: RR discharge-Yacolt Wa - Section 35 - T5N, R3E and Section 02, T4N, R3E

Chuck,

Attached is the Pipeline Process & Application to get this process started, please let me know if you have any questions.  In the mean time I will send the provided information to Will Cahill the Railroad Inspector.

Thank you,

Beka Telles, Realtor
Iron Horse Real Estate & Property Management
111 University Parkway, Suite 200
Yakima, WA  98901
(509) 966-5916 ext 106
(509) 453-9349 fax
www.temple-industries.com
~~~~~~~~~~~~~~~~~~~~~~~~~~~~~~~~~~~~~~~~~~~~~~~~~~~~~
Railroad Property Management Dept.
Building & Land Management for Iron Horse Development, LLC
~~~~~~~~~~~~~~~~~~~~~~~~~~~~~~~~~~~~~~~~~~~~~~~~~~~~~

CONFIDENTIALITY NOTICE: This e-mail and any attachments thereto may  contain information which is privileged and confidential, and is intended for the sole use of the recipient(s) named above. Any use of the information contained herein (including, but not limited to, total or partial reproduction, communication or distribution in any form) by persons other than the designated recipient(s) is strictly prohibited.  If you have received this e-mail in error, please notify the sender either by telephone or by e-mail and delete the material from any computer.

**Please consider the environment before printing this email.**

Beka

**From:** Chuck McDonald [mailto:ChuckMcDonald@KennedyJenks.com]
**Sent:** Monday, July 12, 2010 4:19 PM
**To:** Beka Telles
**Cc: Subject:** RR discharge-Yacolt Wa - Section 35 - T5N, R3E and Section 02, T4N, R3E

Becka

Enclosed are four sheets regarding a potential infiltration pipe installation that we discussed within RR right of way. The current R/W is still owned by Clark County but is abandoned and there have been discussions between Clark County and the Town of Yacolt related to the development of a trail system along this R/W. The potential infiltration system would be below ground and not affect the ground surface. The groundwater in the area is substantially below the proposed pipe location according to monitoring information in the Hart Crowser *Yacolt Hydrogeologic Study, January 1996.*

Please circulate this among your review team and advise us as to the potential of use of this Right of Way for the Town of Yacolt.

If you have additional questions or need other information please contact me.

---

**Chuck McDonald | NW Construction Manager/Sr. Civil Engineer**
**Kennedy/Jenks Consultants**
**200 SW Market St, Suite 500 | Portland, OR 97201**

**P: 503-295-4911 | F: 503-295-4901 | Direct: 503-423-4056**

# Appendix C

## Vendor Information

# Yocalt, Washington

## AIRVAC Estimate #2008-205

## November 3, 2008

**Prepared for:**

Kennedy/Jenks Consultants


**AIRVAC, INC.**
**200 Tower Drive**
**Suite A**
**Oldsmar, FL 34677**
**813.855.6297**
**813.855.9093**

**Corporate Office**
**4217 N. Old US 31**
**Rochester, IN 46975**
**574.223.3980**
**574.223.5566**

**THE WORLD LEADER IN VACUUM SEWER TECHNOLOGY**

TAMPA OFFICE
AIRVAC, INC.
200 Tower Drive, Suite A
Oldsmar, FL 34677 U.S.A.
Phone: (813) 855-6297
Fax: (813) 855-9093
Web: www.airvac.com

November 3, 2008

Chuck McDonald, P.E.
Senior Civil Engineer
Kennedy/Jenks Consultants
200 SW Market Street, Suite 500
Portland, Oregon 97201
503-423-4056

**RE: Yocalt, Washington**
**AIRVAC Estimate #2008-205**

Dear Mr. McDonald,

Thank you for considering AIRVAC, *the world leader in vacuum sewer system technology*, for your collection needs. AIRVAC currently has 270 vacuum sewer systems in operation and 21 in construction or scheduled to start construction in 2008. AIRVAC vacuum sewer systems can be found in 28 states within the U.S. and an additional 500+ AIRVAC vacuum systems in operation in 32 foreign countries.

A vacuum sewer system has the following advantages over other alternative wastewater collection methods:

- Vacuum sewer systems provide a superior collection system when compared to a gravity sewer system. First, the inherent tight nature of a vacuum system eliminates I/I problems associated with gravity system. Second, shallow vacuum main installation makes future connections and repairs much easier than deeply trenched gravity sewers. Finally, odors are significantly reduced since no manholes or other openings exist within a vacuum collection system.

- A vacuum sewer system outperforms low-pressure sewers utilizing grinder pumps. Power is only required at the vacuum station. Grinder pumps require a power source at each service connection. Standby power at the vacuum station insures uninterrupted service during power outages, whereas standby power is not practical or cost effective for each grinder pump service connection. Finally, long term Operation & Maintenance is significantly less especially when grinder pumps must be replaced every ten years.

The purpose of this evaluation is to provide a vacuum collection system for the Yocalt project area. An illustrative layout, AIRVAC Basis of Pricing report, cost estimate, technical report, and an annual O&M estimate have been prepared. A summary of costs for the vacuum collection system is shown below.

| **Yocalt** | |
|---|---|
| Collection System | $1,881,850 |
| Vacuum Station | $ 553,500 |
| **Total** | **$2,435,350** |
| | |
| Annual O&M | $38,900/yr |

***Please note that our budget estimates include only the costs for the major vacuum system components.*** *The budget estimate does not include items such as force main, final surface restoration, road borings, building hookups and other incidental costs. Nor does it include project costs such as engineering, R-O-W, legal, etc.*

Again, thank you for allowing us to evaluate the project area. If there is any additional technical information you would like, please do not hesitate to call.

Sincerely,

Sean Agans, EI
Sales Engineer

Copy: AIRVAC – Tampa
AIRVAC – Rochester

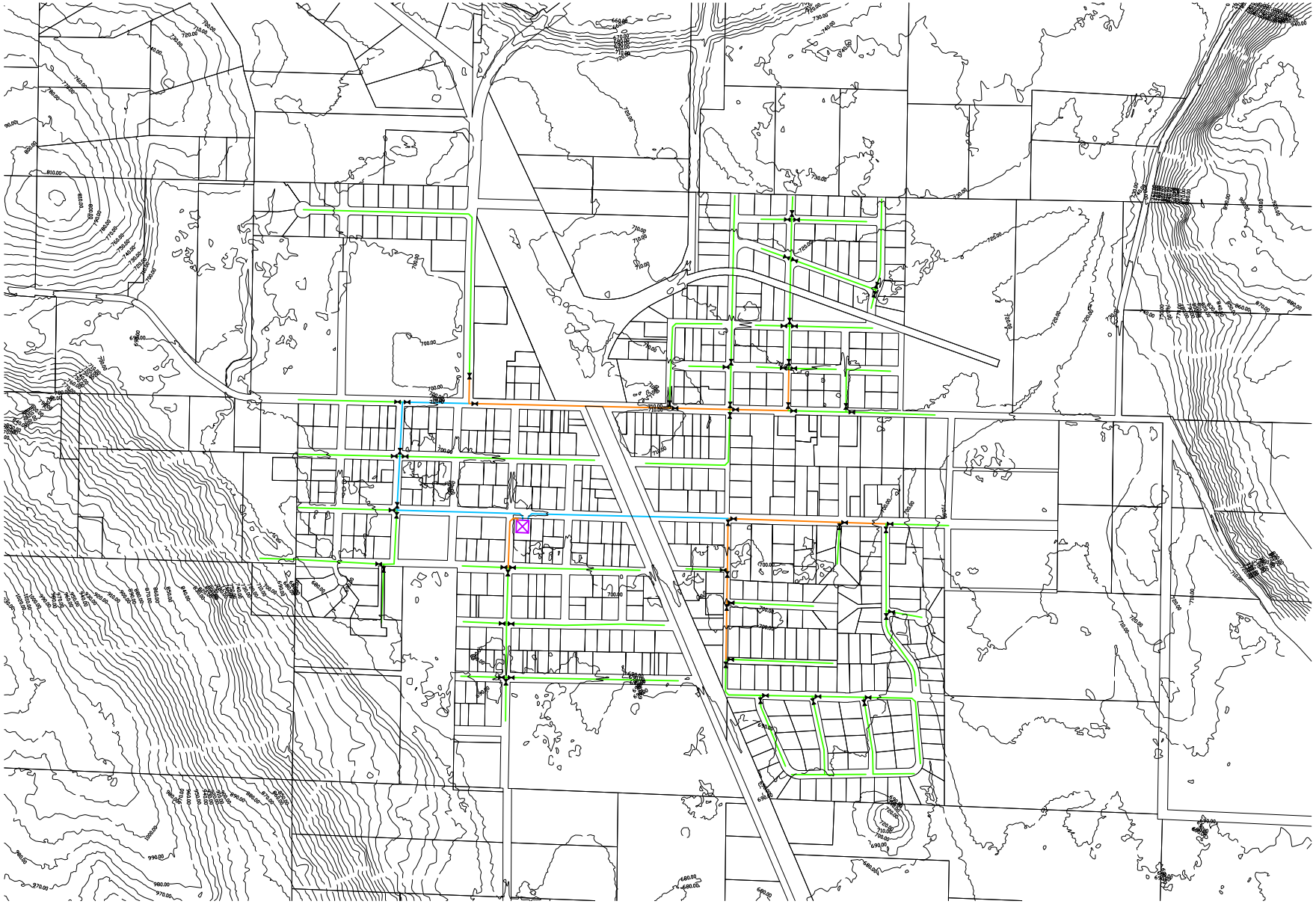

300 150 0 300 600

SCALE: 1" = 300'

## LEGEND

- 4" VACUUM SEWER MAIN
- 6" VACUUM SEWER MAIN
- 8" VACUUM SEWER MAIN
- DIVISION VALVE
- VACUUM STATION

AIRVAC®

VACUUM SEWER SYSTEMS

IN CONSIDERATION OF THE RECEIPT OF THIS DOCUMENT, THE RECIPIENT AGREES NOT TO REPRODUCE, COPY, USE, OR TRANSMIT THIS DOCUMENT AND/OR THE INFORMATION THEREIN CONTAINED IN WHOLE OR IN PART, OR TO SUFFER SUCH ACTION BY OTHER, FOR ANY PURPOSE EXCEPT WITH THE WRITTEN PERMISSION OF AIRVAC, INC. AND FURTHER AGREES TO SURRENDER SAME TO AIRVAC, INC. UPON DEMAND.

AIRVAC, INC
P.O. BOX 528, 4217 N. OLD U.S. 31, ROCHESTER, INDIANA 46975 U.S.A.
TELEPHONE (574) 223-3980
FAX (574) 223-5566

AIRVAC ESTIMATE #2008-205

The Viable Alternative ®

COPYRIGHT © AIRVAC, INC.

| NO. | REVISIONS | DATE |
|---|---|---|
| | | |

TITLE: YOCALT, WASHINGTON
PRELIMINARY VACUUM COLLECTION SYSTEM LAYOUT

CLIENT: KENNEDY/JENKS CONSULTANTS

| DRAWN BY | DATE | SCALE | DRAWING NO. |
|---|---|---|---|
| S.AGANS | 11/03/2008 | 1" = 300' | |
| DESIGNED BY S.AGANS | COPYRIGHT © AIRVAC® | | |

**AIRVAC BASIS OF PRICING**
**Yocalt, Washington**

**BASIS OF PRICING**

Shown below is the expected year 2008 price range for the various products offered by AIRVAC. Final pricing will be determined after final plans and specifications are completed.

| ITEMS SUPPLIED BY AIRVAC | PRICE RANGE |
|---|---|
| AIRVAC valve pit | $ 2,900 - $ 3,500/ea |
| Special tools | $ 3,500 - $ 5,000/set |
| Trailer mounted vacuum pump | $ 18,000 - $ 20,000/ea |
| AIRVAC skid | $200,000 - $ 225,000/ea |
| Field services | $ 2,400 - $ 2,600/wk |

*The AIRVAC prices above do not include installation*.

**AIRVAC VALVE PIT**

AIRVAC offers a 1-piece PE pit and 3-piece fiberglass pit in various depths. AIRVAC recommends the use of the 1-piece PE pit for most projects. In situations where deeper pits are needed, the 3-piece fiberglass pit is used. It has been assumed the AIRVAC 1-piece PE Pit - 5' deep will be used on the project. Installed costs for the valve pit would increase slightly if deeper pits are used.

**AIRVAC SKID PRICE ADJUSTMENTS**

Each AIRVAC skid is unique. The final price for the skid is dependent on the size and configuration of the equipment as well as any optional equipment desired by the owner/engineer. The price range shown above assumes the standard AIRVAC skid is used. Optional items such as stainless steel tanks, stainless steel deck plates, PLC logic, special sewage pumps, UL labels, etc. may add 25% or more to the above figures.

**FIELD SERVICES**

The correct installation of a vacuum sewer system is critical to its success. AIRVAC field services help to ensure proper installation. The Field Service Representative can also provide immediate resolution to unforeseen construction difficulties as well as provides advice on whether "lifts" can be added or deleted. This helps minimize contractor downtime resulting in fewer change orders.

Three levels of field service support are offered. The first level is full-time field services. A trained Field Service Representative is on site from the beginning of installation and every day until the job is complete and the system is in operational. This option ensures the highest level of system performance. The second level is half-time field services. A trained Field Representative is on site 50 percent of the time. The third and final level is part-time field services. A trained Field Representative is on site during selected critical stages of the construction phase.

One option should be included in the project budget. Based on our past experience, we estimate the vacuum collection system will require approximately 22 weeks of full-time field services.

**"FOR WHAT ITS WORTH" INSTALLED PRICES**

Construction conditions on each project are unique; therefore, installed prices are project specific. In order to provide installed prices similar completed AIRVAC projects have been used as a reference. Estimated installed prices are shown below. These prices include AIRVAC material and estimated installation costs.

| | |
|---|---|
| 8" Vacuum Sewer | $ 80.00/lf |
| 6" Vacuum Sewer | $ 70.00/lf |
| 4" Vacuum Sewer | $ 60.00/lf |
| 3" Service Laterals (Main to pit) | $ 400.00/ea |
| 8" Division valve | $ 1250.00/ea |
| 6" Division valve | $ 1000.00/ea |
| 4" Division valve | $ 800.00/ea |
| AIRVAC Valve pit (installed) | $ 3800.00/ea |
| Special tools (1 set per project) | $ 4800.00/set |
| Spare parts | (multiply 3% x valve pit $$) |
| Trailer mounted vacuum pump (testing) | $19000.00/ea |
| AIRVAC Field Rep | $ 2500.00/wk |
| Vacuum station-complete (skid + building) | 3.0 to 3.5 x skid price |

Please note that our cost estimate does not include items such as mobilization, final surface restoration, homeowner hookups and other incidental costs. Nor does it include project costs such as engineering, R-O-W, legal, etc. All labor to install AIRVAC and other items will be supplied by the contractor.

AIRVAC®

# COST ESTIMATE

**Yocalt, Washington**
**Yocalt Vacuum Station**
Estimate No. 2008-205
Estimate Date: November 03, 2008
Client: Kennedy/Jenks Consultants

**Connections:**
500 Residential Service Connections

## INSTALLED COST-COLLECTION SYSTEM

| Quantity | Description | @ | Unity Price | Total Price |
|---|---|---|---|---|
| 3,100 lf | 8" Vacuum Main | @ | 80.00 /lf | 248,000 |
| 4,500 lf | 6" Vacuum Main | @ | 70.00 /lf | 315,000 |
| 2,700 lf | 4" Vacuum Main | @ | 60.00 /lf | 162,000 |
| 250 ea | 3" Service Lateral | @ | 400.00 /ea | 100,000 |
| 3 ea | 8" Division Valve | @ | 1,250.00 /ea | 3,750 |
| 10 ea | 6" Division Valve | @ | 1,000.00 /ea | 10,000 |
| 51 ea | 4" Division Valve | @ | 800.00 /ea | 40,800 |
| 250 ea | AIRVAC Valve Pit Package | @ | 3,800.00 /ea | 950,000 |
| 1 set | Special Tools | @ | 4,800.00 /set | 4,800 |
| 3% | Spare Parts | @ | | 28,500 |
| 1 ea | Trailer Mounted Vacuum Pump | @ | 19,000.00 /ea | 19,000 |
| | | | **COLLECTION SYSTEM COST** | $1,881,850 |

## INSTALLED COST-STANDARD VACUUM STATION

| | |
|---|---|
| Equipment (AIRVAC supply - standard skid) | 157,500 |
| Equipment Installation | 36,000 |
| Wiring/Piping, etc. | 20,000 |
| Building | 300,000 |
| Generator | 25,000 |
| Odor Control | 15,000 |
| Adjustment | 0 |
| **VACUUM STATION COST** | $553,500 |
| **TOTAL INSTALLED COSTS** | $2,435,350 |
| Number of Connections | 500 |
| Cost per Connection | $4,871 |

Estimate does not include site specific items such as surface restoration, road bores,etc.
AIRVAC Field Services should be included in project budget (Options: full time, part time, train engineer's inspector)
Estimate good for 1 year

## EXPLANATION OF STANDARD COLLECTION SYSTEM COMPONENTS

**Vacuum Main –** PVC thermoplastic pipe Schedule 40 or SDR 21 PVC pipe, with SDR 21 recommended. To reduce expansion and contraction induced stresses, flexible elastic joint ("rubber ring" joint) pipe is recommended. Pipe manufacturer requires the "Reiber Style" gasket for certification of pipe.

**Service Lateral** - 3" diameter Schedule 40 or SDR 21 PVC pipe which connects the valve pit package or buffer tank to the vacuum main

**Division Valve** – Resilient-wedge gate valve used to isolate sections of the vacuum system for troubleshooting purposes.

**AIRVAC Valve Pit** – Consists of a 3" AIRVAC interface valve, fiberglass or polyethylene plastic pit, cast iron cover w/ frame, in-sump breather, and sump. The valve pit package is H20 traffic-rated and can serve up to four properties or 3 gpm. The most common arrangement is a single valve pit package serving two properties.

**Special Tools** – Consist of materials and tools needed for installation and maintenance of the system, i.e. sensor pipe puller, test box, cycle counters…

**Spare Parts** – Consists of materials to maintain the 3" AIRVAC interface valve, i.e. controller mounting keys, tubing, valve rebuild kit…

**Trailer Mounted Vacuum Pump** – Aids the contractor in the vacuum main testing process.

**Force Main** - Force main costs are not included in our budget estimate; however, the cost for the vacuum station includes sewage pumps sized to transmit the flow to the ultimate point of discharge.

## EXPLANATION OF STANDARD VACUUM STATION COMPONENTS

The vacuum station is a package station where the skid-mounted mechanical and electrical plant is supplied pre-assembled, tested and painted.

**Collection Tank** – Mild steel, internally and externally epoxy coated tank with a designed working pressure of 20 in. Hg vacuum and tested to 28 in. HG vacuum.

**Sewage Pumps –** Duplicate Dry-pit, horizontal, non-clog centrifugal pumps each capable of pumping the design peak flow.

**Vacuum Pumps** – Multiple sliding-vane type vacuum pumps capable of an ultimate vacuum range of 29" Hg and offer efficient air-delivery-to-horsepower ratios. Horsepower varies with total flow rate, normally 10 - 25 Hp.

**Building** – Multi-level structure with a basement for the collection tank and sewage pumps and a ground floor for the vacuum pumps and control panel.

**Generator** – Used to provide standby power for duty discharge and vacuum pump operation - can be located either inside or outside of the vacuum station.

**Odor Control** – Bio-mass compost bed for airborne $H_2S$ within the vacuum pump exhaust.

**Adjustments** - Includes stainless steel upgrades, control panel upgrades, difficult site conditions, upgrade of the building, etc.

**TECHNICAL REPORT**
**Yocalt, Washington**

## INTRODUCTION

A vacuum sewer system is a mechanized method of transporting wastewater. Differential air pressure creates flow rather than gravity or pressure. Essentially, a vacuum sewer system is a negative pressure sewer system.

Vacuum sewer systems require a vacuum station similar to a gravity lift station or pumping station. Unlike a lift station, vacuum pumps maintain vacuum on the collection mains. To maintain this vacuum, a valve at each sewage input point seals the system. The valve opens automatically when a given quantity of sewage accumulates in a collection sump. This valve is entirely pneumatic in its control and operation. Differential pressure between local atmospheric pressure and the vacuum pressure provides the thrust needed for liquid transportation.

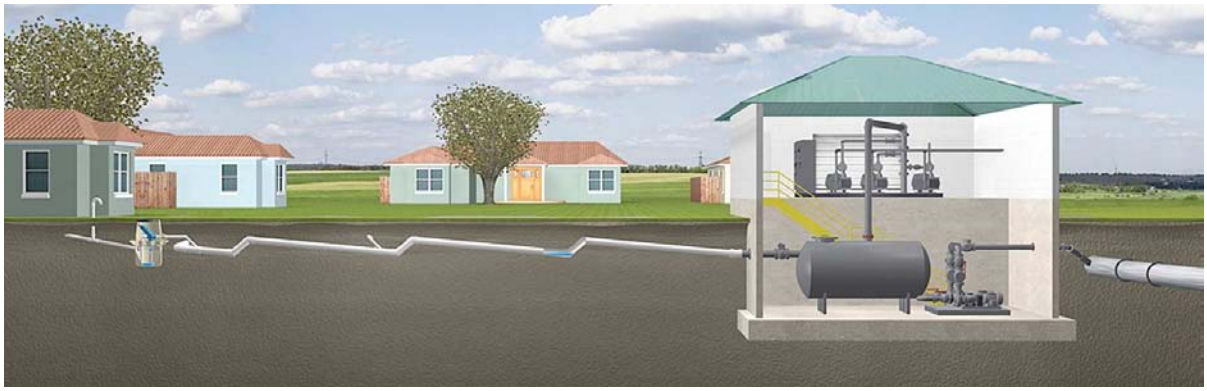

## GENERAL PROJECT SUMMARY

The proposed collection system requires one vacuum station. Wastewater will enter the vacuum system through AIRVAC valve pit packages. From the vacuum station a force main will carry the wastewater to the ultimate point of discharge.

## CONNECTIONS

A vacuum collection system typically collects wastewater from many different sources. Sources include residential, commercial, industrial, institutional, and recreational areas. The Yocalt vacuum sewer system has been sized to collect wastewater from 500 residential connections.

## BASIS OF DESIGN

Determining wastewater flow rates is a fundamental step in the conceptual design of a vacuum collection system. Reliable data for existing and projected flow rates affect the hydraulic characteristics and sizing of the vacuum collection system components. Flow rates from residential, commercial, industrial, institutional, and recreational areas must be established before the collection system can be accurately designed.

Extraneous flow into the collection system from infiltration and inflow is not included in the flow rates. By its very nature, a vacuum sewer system is tight leaving no chance of infiltration or inflow, unless a break occurs. A break or small leak would be detected by an increase in vacuum pump run time and would be isolated and repaired.

All of the major vacuum system components are sized according to peak flow, expressed in gallons per minute (gpm). Peak flow rates are calculated by applying a peaking factor of 3.5 to the average daily flow rate of 300 gpd per residential connection. A summary of the system design flows is shown below.

**Design flows**

| | |
|---|---|
| Flow per capita | 100 gpd |
| Capita per connection | 3.0 |
| Average daily flow per connection | 300 gpd |
| Peak factor | 3.5 |
| Peak flow per connection | 0.73 gpm |
| | |
| Residential service connections | 500 |
| Average daily flow | 150,000 gpd |
| **Peak flow** | **365 gpm** |

**3" INTERFACE VALVE**

The vacuum sewer system requires a normally closed vacuum/gravity interface valve at each entry point to seal the lines in order to maintain vacuum. The interface valves opens when a predetermined amount of sewage accumulates in the collecting sump. The resulting differential pressure between atmosphere and vacuum becomes the driving force that propels the sewage towards the vacuum station.

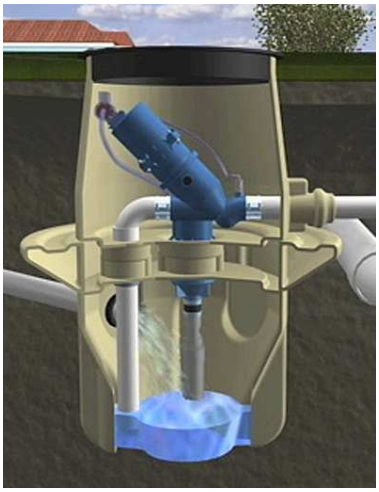

The valve pit, with two internal chambers, provides the vacuum/gravity interface. The upper chamber houses the AIRVAC Three Inch Valve. The bottom chamber or collecting sump allows a connecting point for the gravity sewer. These two chambers are sealed from each other.

The valve pit is typically located in the right-of-way between property lines and is able to withstand traffic loads. Up to four separate building sewers can connect to a valve pit, each at 90 degrees of one another. However, this is rarely done as property lines considerations, lot depths, and elevation differences may render this impractical. By far, the most common valve pit sharing arrangement is a single valve pit shared by two adjacent houses.

Included in the Yocalt budget estimate are 250 valve pits for the 500 residential service connections.

**VACUUM MAIN**

Each AIRVAC 3" interface valve is connected to the vacuum collection system by a 3" service lateral. Differential air pressure (7-10 psi) propels the sewage into the vacuum collection system. Turbulence disintegrates the solids and mixes them with the air and liquid to form aerobic foam, which scours the pipeline, preventing blockage.

The 3" service lateral connects to a branch or main line. Unlike gravity sewers that must be laid with enough slope to create a scoring velocity, the vacuum lines are only slightly sloped (0.2%) toward the vacuum station since vacuum provides adequate velocity.

The vacuum mains are installed with a saw tooth profile to minimize burial depth. When the vacuum line exceeds the minimal cover by a foot or more, inserting two 45-degree fittings and a short section of pipe creates a lift back to minimum cover.

Division valves are installed in the branch or main lines to allow portions of the piping system to be isolated for troubleshooting and maintenance.

**VACUUM STATION**

The vacuum station is the heart of the vacuum collection system. The machinery installed is similar to that of a conventional sewage pumping station or lift station, except vacuum is applied to the wetwell (collection tank) that is sealed. Major components including a collection tank, sewage pumps, vacuum pumps, and a control panel.

Most modern vacuum systems utilize factory pre-fabricated collection stations mounted on skids for ease of installation. This allows the skid to be lifted into the building and connect to the incoming vacuum mains and the outgoing force or gravity main. The AIRVAC skid model chosen for the Yocalt project is follows.

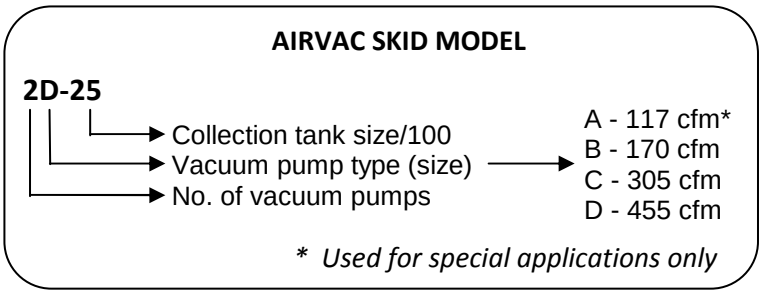

The AIRVAC Skid is typically housed in a two story structure with the vacuum pumps and control panel located on the top floor and the collection tank and sewage pumps on the lower floor. Since the systems require only one source of power, many systems utilize existing portable generators for emergency power; others have permanently installed backup generators.

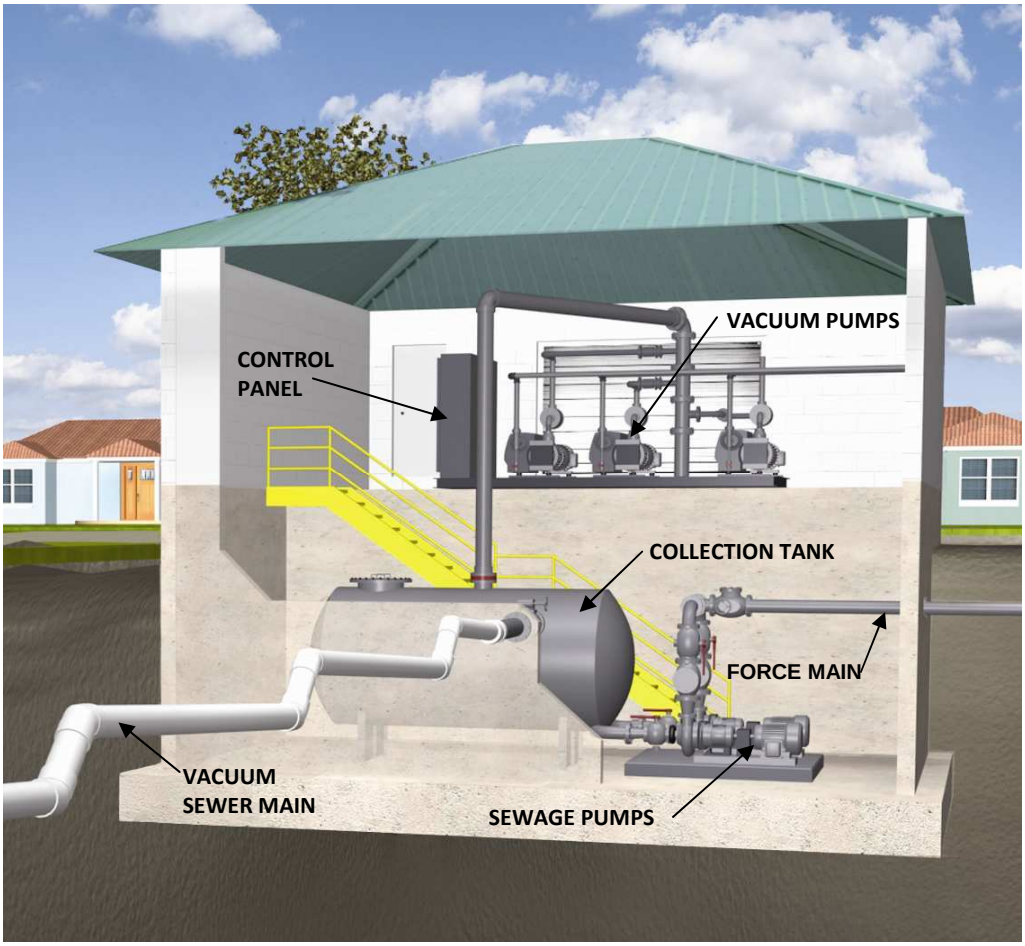


**OPERATION & MAINTENANCE ESTIMATE**

Enclosed is an estimate of the annual Operational & Maintenance costs (O&M) for this project. The O&M estimate has been based on the 1991 United States Environmental Protection Agency (EPA), publication number EPA/625/1-91/024, *The Manual For Alternative Wastewater Collection Systems* and the 2008 Water Environment Federation (WEF) *Alternative Sewer Systems, 2nd ed.; Manual of Practice No. FD-12.*

AIRVAC®

# O&M ESTIMATE

**Yocalt, Washington**
**Yocalt Vacuum Station**
Estimate No. 2008-205
Estimate Date: November 03, 2008
Client: Kennedy/Jenks Consultants

**Connections:**
500 Residential Service Connections

## LABOR

| Item | Labor effort | | Quantity | | | Annual Labor |
|---|---|---|---|---|---|---|
| Vacuum Station | 300 hrs/yr/station | x | 1 station | | = | 300 hrs/yr |
| Piping | 60 hrs/yr/system | x | 1 system | | = | 60 hrs/yr |
| Valves | 1.75 hrs/yr/valve | x | 250 valves | | = | 438 hrs/yr |
| | | | | | | 798 hrs/yr |
| | | | | | x | $25 /hr |
| | | | | | | $19,950 /yr |
| | | | | | ROUND TO: | $20,000 /yr |

## POWER

| Item | Unit cost | | Conn | | Duration | | Annual Power |
|---|---|---|---|---|---|---|---|
| Vacuum Station | | | | | | | |
| Flat rate | $50.00 /mo | x | 1 station | x | 12 mo | = | $600 /yr |
| Consumption | $2.00 /mo/conn | x | 500 conn | x | 12 mo | = | $12,000 /yr |
| | | | | | | | $12,600 |
| | | | | | | ROUND TO: | $12,600 /yr |

## EQUIPMENT REPLACEMENT

| Item | Replacement cost | | Useful life | | Quantity | | Annual R&R |
|---|---|---|---|---|---|---|---|
| Vacuum Station | | | | | | | |
| Vacuum Pumps | $15,800 /ea | / | 15 years | x | 2 pumps | = | $2,107 /yr |
| Sewage Pumps | $5,900 /ea | / | 15 years | x | 2 pumps | = | $787 /yr |
| Collection Tank | $6,900 /ea | / | 15 years | x | 1 ea | = | $460 /yr |
| Control Panel | $7,500 /ea | / | 20 years | x | 1 ea | = | $375 /yr |
| Misc. Equip | $2,000 /ea | / | 15 years | x | 1 ea | = | $133 /yr |
| | | | | | | | $3,862 /yr |
| | | | | | | ROUND TO: | $3,900 /yr |
| Vacuum Valves | | | | | | | |
| Vacuum Valves | $20.00 /ea | / | 10 years | x | 250 valves | = | $500 /yr |
| Controller | $40.00 /ea | / | 7 years | x | 250 valves | = | $1,429 /yr |
| Misc. Parts | $20.00 /ea | / | 10 years | x | 250 valves | = | $500 /yr |
| | | | | | | | $2,429 /yr |
| | | | | | | ROUND TO: | $2,400 /yr |

## SUMMARY

| | |
|---|---|
| Labor | $20,000 /yr |
| Power | $12,600 /yr |
| Equipment Replacement (Station) | $3,900 /yr |
| Equipment Replacement (Valves) | $2,400 /yr |
| | $38,900 /yr |
| Number of Connections | 500 |
| Cost per Connection | $78 /yr/conn |

AIRVAC®

# STATION CALCULATIONS

**Yocalt, Washington**
**Yocalt Vacuum Station**
Estimate No. 2008-205
Estimate Date: November 03, 2008
Client: Kennedy/Jenks Consultants

**Connections:**
500 Residential Service Connections

| | | | | | | |
|---|---|---|---|---|---|---|
| NUMBER OF CONNECTIONS | | 500 | | | CONNECTION CAPACITY | 540 |
| GROWTH FACTOR | x | **1.00** | | | | |
| PER CAPITA FLOW | x | **100** | gpd | | | |
| PERSONS/CONNECTION | x | **3.00** | | | | |
| PEAK FACTOR | x | **3.50** | | | | |
| PEAK FLOW | = | 365 | gpm | | | |
| OTHER PEAK FLOW | + | 0 | gpm | | | |
| TOTAL PEAK FLOW | | **365** | **gpm** | **Qmax** | CAPACITY Qmax | 394 gpm |
| AVERAGE FLOW | | 104 | gpm | Qa | | |
| MINIMUM FLOW | | 52 | gpm | Qmin | | |
| "A" FACTOR | | 7 | | | | |
| VACUUM PUMP CAPACITY REQUIRED | | 341 | cfm | Qvp | | |
| SELECTED VACUUM PUMPS | **2** | **455** | cfm | Qvp (SELECTED PUMP) | | |
| SEWAGE PUMP CAPACITY | | **370** | gpm | Qdp (SELECTED PUMP) | | |
| OPERATING VOLUME | | 670 | gal | Vo | | |
| TANK VOLUME REQUIRED | | 2,400 | gal | | | |
| SELECTED TANK VOLUME | | 2,500 | gal | Vct | | |
| VOLUME OF PIPE | | 21,230 | gal | Vp | CAPACITY Vp | 42,800 gal |
| SYSTEM PUMP DOWN TIME | | 1.58 | min | t | | |

SKID MODEL **2D-25**

- Collection Tank Size/100
- Vacuum Pump Type (size) → A - 117 cfm; B - 170 cfm; C - 305 cfm; D - 455 cfm
- No. of Vacuum Pumps

*The World Leader in Vacuum Sewer Technology*

**AIRVAC prides itself on the ability to deliver a broad range of services from planning, design, and engineering support to inspection, training and contractor services. We focus our efforts on developing full-service, long-term customer relationships.**

**Please call us with any questions.**

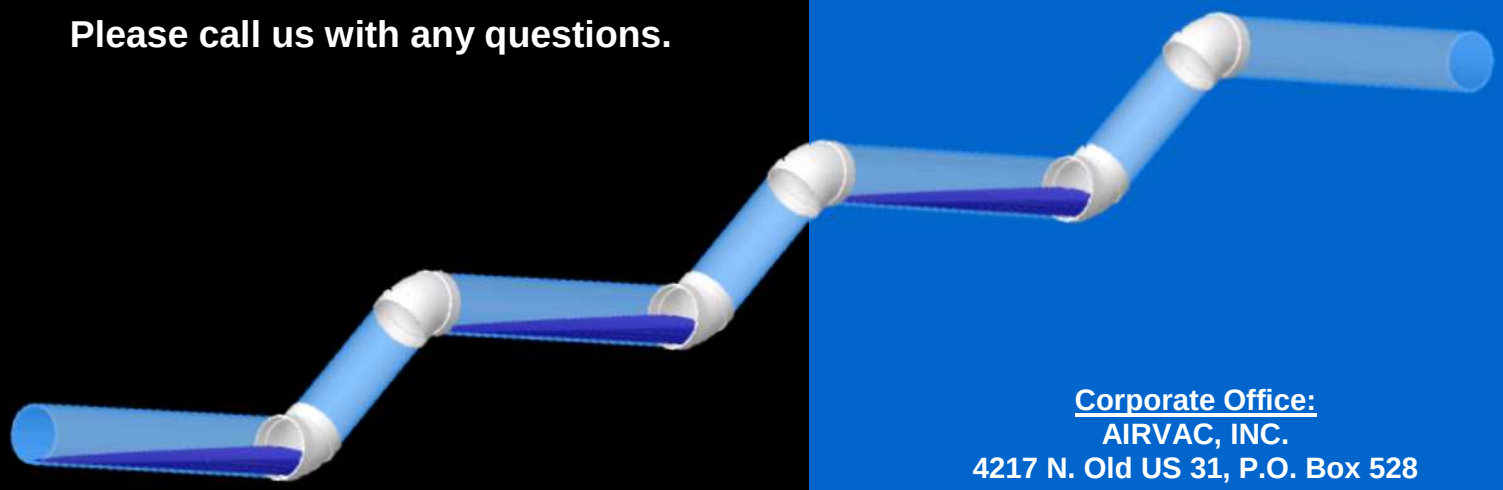


**Corporate Office:**
**AIRVAC, INC.**
**4217 N. Old US 31, P.O. Box 528**
**Rochester, IN 46975**
**Phone: 574.223.3980**
**Fax: 574.223.5566**

**National Sales Office:**
**AIRVAC, INC.**
**200 Tower Drive, Suite A**
**Oldsmar, FL 34677**
**Phone: 813.855.6297**
**Fax: 813.855.9093**

**www.airvac.com**

# Appendix D

## Agency Support Letters

***Commissioners***

Nancy E. Barnes
Carol J. Curtis
Byron H. Hanke

***Chief Executive Officer/ General Manager***

Wayne W. Nelson

September 14, 2010

Mayor Joe Warren
Town of Yacolt
PO Box 160
Yacolt, WA 98675

Re: Town of Yacolt – General Sewer Plan

Dear Mayor Warren:

Clark Public Utilities is submitting this letter in support of the Town of Yacolt's General Sewer Plan and its efforts towards constructing a sanitary sewer system within its town limits.

Clark Public Utilities has a long history and interest in protecting the shallow sole source aquifer which serves not only its customers but also the Town of Yacolt. The utility has been active in monitoring the basin and working for continued protection of groundwater sources. An important component of continued protection of the aquifer is minimizing the growth of septic systems in the area. Therefore, the utility supports Yacolt's General Sewer Plan and the eventual construction of a sanitary service within its town limits as a significant factor in accomplishing such a reduction in septic systems.

Sincerely,

Doug Quinn, P.E.
Director of Water Services

P.O. Box 8900 • Vancouver, Washington 98668 • www.clarkpublicutilities.com
Vancouver 360 992-3000 • Portland 503 285-9141 • Fax 360 992-3204 • E-mail: mailbox@clarkpud.com

proud past, promising future
CLARK COUNTY
WASHINGTON

**Clark County Public Health**
**Environmental Public Health**
1601 E. Fourth Plain Blvd. ♦ PO Box 9825
Vancouver, WA 98666-8825
(360) 397-8428

September 24, 2010

Mayor Joe Warren
Town of Yacolt
105 E Yacolt Rd, P.O. Box 108
Yacolt, WA 98675

RE: Letter of Support

Dear Mayor Warren,

Clark County Public Health is an enthusiastic partner with the Town of Yacolt and Clark Public Utilities in protecting groundwater in the Yacolt Groundwater Basin. Our goal has been to promote a sustainable and safe community drinking water supply by protecting the wells that are the source of water. This partnership began in the late 1980's as we worked together to draft a policy that addressed on-site sewage systems utilized on small non-conforming lots within the Town of Yacolt. In 2004 this department, Town of Yacolt and CPU worked together to draft a Town ordinance establishing a successful on-site sewage system operation and maintenance program.

These efforts have allowed the town to grow to the size it maintains today while utilizing on-site sewage system (OSS) for wastewater management. OSS's are an effective method to treat, disperse and manage wastewater in rural low density areas. However, as the number of OSS's has increased in the Town of Yacolt, the potential for biological and inorganic contamination of the groundwater has also increased. Therefore, Clark County Public Health supports your efforts in developing and implementing a general sewer plan for the Town of Yacolt.

I'm more than willing to provide guidance in selecting the most creative and beneficial technology that will meet public health and environmental protection in an economically feasible manner.

Please contact me at tom.gonzales@clark.wa.gov or 360.397.8154 if I can be of further assistance.

Kindest regards,

Thomas R. Gonzales, M.P.H., R.E.H.S.
Program Manager

PUBLIC WORKS

proud past, promising future

CLARK COUNTY
WASHINGTON

December 30, 2010

Mr. Chuck McDonald
Kennedy/Jenks Consultants
200 SW Market Street, Suite 500
Portland, OR 97201

Dear Chuck,

RE: Yacolt Wastewater Sludge

Clark County would gladly accept and treat raw sludge generated from the proposed Wastewater Treatment Plant in the Town of Yacolt. The Salmon Creek Wastewater Treatment Plant has sufficient capacity and the Town of Yacolt would generate a small amount of solids in comparison to our service area.

Please call me at (360) 397-6118, extension 4071 or e-mail me at Peter.Capell@clark.wa.gov if you have any questions.

Sincerely,

Peter Capell

Peter Capell, P.E.
Public Works Director/County Engineer

aj
C: Kay Hust, SCWTP
John Peterson, CRWD

1300 Franklin Street • P.O. Box 9810 • Vancouver, WA 98666-9810 • tel: [360] 397-6118 • fax: [360] 397-6051 • www.clark.wa.gov

# Appendix E

## SEPA Checklist

- SEPA Response Letter from Clark County – Dept of Community Development
- SEPA Reply Letter to Clark County – Dept of Community Development

File: 09 - 0891009.00
DNS 09 - 01

Date Published: January 27, 2009

Please find enclosed an environmental Determination of Non-Significance issued pursuant to the State Environmental Policy Act (SEPA) Rules (Chapter 197-11), Washington Administrative Code.

You may comment on this DNS by submitting written comments within Fifteen (15) days of this notice as provided for by WAC 197-11-408.

Please address all correspondence to: Kennedy/Jenks Consultants
200 SW Market Street, Suite 500
Portland, OR 97201

Attn: Chuck McDonald

## DISTRIBUTION LIST

### Federal Agencies

- US Army Corps of Engineers, Portland District
- Northwest Power Planning Council
- Bonneville Power Administration

### Native American Interests

- Chinook Indian Tribe
- Cowlitz Indian Tribe
- Yakima Indian Nation

### State Agencies

- Office of Archaeology and Historic Preservation
- Department of Community Development
- Department of Ecology
- Department of Health
- Department of Natural Resources – SEPA Center
- Department of Fish and Wildlife

**Regional Agencies**

- Fort Vancouver Regional Library
- Battle Ground Branch-FV Library
- Southwest Clean Air Agency

**Local Agencies**

- City of Battle Ground
- City of La Center
- Clark County Department of Community Development
  - Administration
  - Central Files
  - Water Quality Division
- Department of Public Works
  - Administration
- Clark County Public Health

**Special Purpose Agencies**

- C-Tran
- CRESA
- Clark Public Utilities
- Battle Ground School District
- Clark Regional Wastewater District
- Fire Protection District 13

**Interest Groups**

- Building Industry Association
- Neighborhood Associations Council of Clark County
- Clark County Natural Resources Council
- Vancouver Housing Authority
- Columbia River Economic Development Council
- Fish First

# DETERMINATION OF NONSIGNIFICANCE

Description of proposal: Adoption of the Yacolt Comprehensive General Sewer Plan (GSP). This plan provides for the planning, design and construction of capital facilities within the Town of Yacolt for the next 20 year planning period. The applicable costs estimated will be used to establish sanitary sewer connection fees and monthly service fees.

Proponent: **Town of Yacolt**

Location of proposal, including street address, if any.

**Town of Yacolt, Urban Growth Area**

Lead Agency: **Town of Yacolt**

The lead agency for this proposal has determined that it does not have a probable significant adverse impact on the environment. The environmental impact statement (EIS) is not required under RCW 43.21C.030(2)(c). This decision was made after review of a completed environmental checklist and other information on file with the lead agency. This information is available to the public on request.

___ There is no comment period for this DNS.

_X_ This DNS is issued under WAC 197-11-3420(2); the lead agency will not act on this proposal for 15 days from the date below. Comments must be submitted by February 11, 2009

Responsible Official: **Joe Warren**
Position/Title: **Mayor**
Telephone: **360-686-3922**
Fax:
Address: **P.O. Box 160**
**105 E. Yacolt Road**
**Yacolt, WA 98675**

Date: January 20, 2009 Signature

# ENVIRONMENTAL CHECKLIST

Purpose of Checklist:

The State Environmental Policy Act (SEPA), Chapter 43.21C RCW, requires all governmental agencies to consider the environmental impacts of a proposal before making decisions. An environmental impact statement (EIS) must be prepared for all proposals with probably significant adverse impacts on the quality of the environment. The purpose of this checklist is to provide information to help you and the agency identify impacts from your proposal (and to reduce or avoid impacts from the proposal, if it can be done) and to help the agency decide whether an EIS is required.

Instructions for Applicants:

This environmental checklist asks you to describe some basic information about your proposal. Governmental agencies use this checklist to determine whether the environmental impacts of your proposal are significant, requiring preparation of an EIS. Answer the questions briefly, with the most precise information known, or given the best description you can.

You must answer each question accurately and carefully, to the best of your knowledge. In most cases, you should be able to answer the questions from your own observations or project plans without the need to hire experts. If you really do not know the answer, or if a question does not apply to your proposal, write "do not know" or "does not apply". Complete answers to the questions may avoid unnecessary delays later.

Some questions ask about governmental regulations, such as zoning, shoreline, and landmark designations. Answer these questions if you can. If you have problems, the governmental agencies can assist you.

The checklist questions apply to all parts of your proposal, even if you plan to do them over a period of time or on different parcels of land. Attach any additional information that will help describe your proposal or its environmental effects. The agency to which you submit this checklist may ask you to explain your answers or provide additional information reasonably related to determining if there may be significant adverse impact.

Use of Checklist of Non-Project Proposals:

Complete this checklist for non-project proposals, even though questions may be answered "does not apply". IN ADDITION, complete the SUPPLEMENTAL SHEET FOR Non-project ACTIONS (part D).

For non-project actions, the references in the checklist to the words "project," "applicant," and "property or site" should be read as "proposal," "proposer," and "affected geographic area," respectively.

# A. BACKGROUND

1. Name of Proposed Project, if applicable:

   ***Comprehensive General Sewer Plan (GSP) for the Town of Yacolt***

2. Name of Applicant: ***Town of Yacolt***

3. Address and Phone Number of Applicant and Contact Person:

   ***P.O. Box 160***
   ***105 E. Yacolt Road***
   ***Yacolt, WA 98675***

   ***360-686-3922***

   ***Attn:*** **Pete Roberts, Public Works Director**

4. Date Checklist Prepared:

   ***January 6, 2009***

5. Agency Requesting Checklist:

   ***Town of Yacolt***

6. Proposed Timing or Schedule (including phasing, if applicable):

   ***Adoption of the GSP is scheduled for 2009 following approval by the Washington State Department of Ecology. The schedule for projects is listed in the Capital Facility Plan component but is a function of financing for the projects.***

7. Do you have any plans for future additions, expansions, or further activity related to or connected with this proposal? If yes, please explain.

   ***Yes, future updates or amendments will occur in conjunction with Clark County Growth Management updates and changes to the current Urban Growth Boundary (UGB). Other potential impacts could include changes to current development policies or requests for changes to zoning.***

8. List any environmental information you know about that has been or will be prepared related to this proposal:

   ***No documents have been prepared at this time. Additional environmental reports will be prepared during the development of the Facility Plan and the construction documents.***

9. Are other applications pending for governmental approvals affecting the property covered by your proposal? If yes, please explain.

   ***No other applications are pending at this time.***

10. List any government approvals or permits that will be needed for your proposal.

    ***Approval by the Yacolt Town Council***
    ***Approval by the Washington State Department of Ecology***

11. Give a brief, complete description of your proposal, including the proposed uses and size of the project and site. There are several questions addressed later in this checklist that ask you to describe certain aspects of your proposal. You do not need to repeat those answers on this page (Lead agencies may modify this form to include additional specific information on project description).

    ***The Town limits of Yacolt include 315 acres. There are 46 acres outside of the incorporated area but within the pre-2007 Urban Growth Area (UGA), with an additional 325 acres located within an urban holding designation that cannot be annexed into the Town until sanitary sewer service is available. There is no public sanitary sewer within Yacolt; all properties are served with individual septic systems. The GSP addresses the need for sanitary sewer within Yacolt and the preliminary evaluation of potential technologies to provide sewer. Using existing population and projections from Clark County (Clark County Growth Management Plan update – 2007) sanitary sewer service has been planned for the community including preliminary planning for treatment and discharge. Infrastructure needs as required by the Washington Administrative Code have been incorporated into the document.***

12. Location of the proposal. Give sufficient information for a person to understand the precise location of your proposed project, including street address, section, township, and range. If this proposal occurs over a wide area, please provide the range or boundaries of the site. Also, a legal description, site plan, vicinity map, and topographic map. You are required to submit any plans required by the agency, but not required to submit duplicate maps or plans submitted with permit applications related to this checklist.

    ***The Town of Yacolt UGB is roughly bounded by West Christy Street on the North, NE Thompson Road on the East, NE 319th Street on the South and Johnson Avenue on the West as shown on the attached map. The proposed service area only includes those areas located within the Yacolt UGA.***

# B. ENVIRONMENTAL ELEMENTS

1. **EARTH**

    A. General description of the site (circle one): **(**flat**)**, rolling, hilly, steep slopes, mountainous, other.

    B. What is the steepest slope on the site and the approximate percentage of the slope?

    ***The Town limits slope to the southwest with a 1% slope over most of the area.***

    C. What general types of soils are found on the site (e.g., clay, sand, gravel, peat, muck)? Please specify the classification of agricultural soils and note any prime farmland.

    ***Soils in the Yacolt valley are primarily unconsolidated sediments deposited by streams and glacial activity. These sediments include a mixture of gravel and sand with variable amounts of silt. There are cobbley gravels overlying bedrock at the north end of Town in the vicinity of the existing wells. The unconsolidated sediments range from 60 to 120 feet in depth, thinning in the south valley area. Soils are primarily Yacolt Loam (YaA) with Yacolt Stony Loam along the west creek beds and Gumboot Silt Loam along the eastern creek beds.***

D. Are there surface indications or history of unstable soils in the immediate vicinity? If so, please describe.

***None known.***

E. Describe the purpose, type and approximate quantities of any filling or proposed grading. Also, indicate the source of fill.

***NA – will be addressed with specific construction projects.***

F. Could erosion occur as a result of clearing, construction or use? If so, please describe.

***NA – erosion should be marginal due to the flat slopes within the Yacolt valley.***

G. What percentage of the site will be covered with impervious surfaces after the project construction (e.g., asphalt or buildings)?

***NA – no construction is proposed in this project. Impervious coverage will be discussed with specific construction projects.***

H. Proposed measures to reduce or control erosion, or other impacts to the earth include:

***NA – will be addressed with specific construction projects.***

2. **AIR**

A. What types of emissions to the air would result from the proposal (e.g., dust, automobile, odors, industrial wood smoke) during construction and after completion? If yes, describe and give approximate quantities.

***NA – will be addressed with specific construction projects.***

B. Are there any off-site sources of emissions or odor that may affect your proposal? If so, please describe:

***NA – none anticipated.***

C. Proposed measures to reduce or control emissions or other impacts to air:

***NA – will be addressed with specific construction projects.***

3. **WATER**

A. Surface

1. Is there any surface water body on or in the vicinity of the site (including year-round and seasonal streams, saltwater, lakes, ponds, wetlands)? If yes, describe type and provide names and into which stream or river it flows into.

***Yacolt has four major streams flowing through the UGA with several unnamed tributaries. The area streams (year round) include Yacolt Creek on the west and south side, Cedar Creek on the north, Weaver Creek along the southeast and Big (Tree) Creek on the east side. Cedar Creek flows into the North Fork of the Lewis River. The remaining three creeks flow into the East Fork of the Lewis River.***

2. Will the project require any work within 200 feet the described waters? If yes, please describe and attach available plans.

   ***NA – wastewater treatment plant and discharge facilities will probably be within 200 feet of a creek and will be addressed with specific construction projects.***

3. Estimate the amount of fill and dredge material that would be placed in or removed from surface water or wetlands and indicate the area of the site that would be affected. Indicate the source of fill material.

   ***None within this proposal.***

4. Will the proposal require surface water withdrawals or diversions? Please provide description, purpose and approximate quantities:

   ***None within this proposal.***

5. Does the proposal lie within a 100-year floodplain? If so, note location on the site plan.

   ***There are designated floodplains for Yacolt Creek and for an unknown tributary to Weaver Creek within the UGA.***

6. Does the proposal involve any discharges of waste materials to surface waters? If so, describe the type of waste and anticipated volume of discharge.

   ***The proposal will ultimately determine a discharge location of treated effluent indirectly into surface waters and possibly directly during high flow – high rainfall months. The anticipated initial discharge will be approximately 150,000 gallons/day.***

B. Ground

1. Will ground water be withdrawn, or will water be discharged to ground water? Please give description, purpose, and approximate quantities.

   ***None within this proposal.***

2. Describe waste material that will be discharged into the ground from septic tanks or other sources, if any (e.g., domestic sewage; industrial, containing the following chemicals…; agricultural; etc.). Describe the size and number of the systems, houses to be served; or, the number of animals or humans the system are expected to serve.

   ***It is anticipated that the implementation of this plan will result in the removal of 500 septic systems from groundwater discharge. The removal of septic systems will improve groundwater quality.***

C. Water Runoff (including storm water):

1. Describe the source of runoff (including storm water) and the method of collection and disposal. Include quantities, if known. Describe where water will flow, and if it will flow into other water.

   ***None within this proposal.***

2. Could waste materials enter ground or surface waters? If so, please describe.

   ***NA***

D. Proposed measures to reduce or control surface, ground, and runoff water impacts, if any:

***NA***

4. **PLANTS**

A. Check or circle types of vegetation found on the site:
_X_Deciduous tree: alder, maple, aspen, other
_X_Evergreen tree: fir, cedar, pine, other
_X_Shrubs
_X_Grass
_X_Pasture
_X_Crop or grain
_X_Wet soil plants: cattail, buttercup, bullrush, skunk cabbage, other
_X_Water plants: water lily, eelgrass, milfoil, other
_X_Other types of vegetation

B. What kind and amount of vegetation will be removed or altered?

***None within this proposal.***

C. List any threatened or endangered species known to be on or near the site.

***None known.***

D. List proposed landscaping, use of native plants, or other measures to preserve or enhance vegetation on the site:

***None within this proposal.***

5. **ANIMALS**

A. Circle any birds and animals which have been observed on or near the site:

Birds: **(***hawk***)**, heron, **(**eagle**)**, **(**songbirds**)**, other: *monk parrot*
Mammals: **(**deer**)**, **(**bear**)**, elk, **(**beaver**)**, other: *raccoons, opossums*
Fish: bass, **(**salmon**)**, **(**trout**)**, herring, shellfish, other:

B. List any threatened or endangered species known to be on or near the site.

***Chinook, coho salmon and steelhead listed as threatened under the federal Endangered Species Act may potentially be present in the four streams identified within the Yacolt UGA.***

C. Is the site part of a migration route? If so, please explain.

***The Yacolt area is within the Pacific Flyway, a major north-south route of travel for migratory birds in the Americas, extending from Alaska to Patagonia.***

D. List proposed measures to preserve or enhance wildlife:

***None within this proposal.***

6. **ENERGY AND NATURAL RESOURCES**

A. What kinds of energy (electric, natural gas, oil, wood stove, solar) will be used to meet the completed project's energy needs? Describe whether it will be used for heating, manufacturing, etc.

***None within this proposal. Gas and electricity will be used to operate the wastewater treatment plant when constructed.***

B. Would your project affect the potential use of solar energy by adjacent properties? If so, please describe.

***No.***

C. What kinds of energy conservation features are included in the plans of this proposal? List other proposed measures to reduce or control energy impacts:

***None within this proposal. Energy conservation will be reviewed and included in the design project where applicable.***

7. **ENVIRONMENTAL HEALTH**

A. Are there any environmental hazards, including exposure to toxic chemicals, risk of fire and explosion, spill, or hazardous waste that could occur as a result of this proposal? If so, please describe.

***None anticipated.***

1. Describe special emergency services that might be required.

   ***None anticipated.***

2. Proposed measures to reduce or control environmental health hazards, if any?

   ***None anticipated. The removal of septic systems will improve groundwater quality.***

B. Noise

1. What types of noise exist in the area which may affect your project (e.g., traffic, equipment operation, other)?

   ***None within this proposal.***

2. What types and levels of noise are associated with the project on a short-term or a long-term basis (e.g., traffic, construction, operation, other)? Indicate what hours the noise would come from the site.

   ***None within this proposal.***

3. Proposed measures to reduce or control noise impacts:

   ***NA***

8. **LAND AND SHORELINE USE**

A. What is the current use of the site and adjacent properties?

***Land use is currently suburban single family residences with properties located outside of the annexed area primarily used as single family residences.***

B. Has the site been used for agriculture? If so, describe.

***Some areas are used for pasture. No properties are currently zoned for agricultural uses.***

C. Describe any structures on the site.

***NA***

D. Will any structures be demolished? If so, please describe?

***NA***

E. What is the current zoning classification of the site?

***Properties within the UGA include zonings of Rural R-5 and R-10, urban zonings of R1-10, R 1-12 and R1-20, Neighborhood Commercial and Convenience Commercial, Light Industrial, Parks and Public Facilities.***

F. What is the current comprehensive plan designation of the site?

***Properties within the UGA include designations of Urban Low, Rural (R-5 and R-10), General Commercial, Light Industrial, Parks and Open space and Public Facilities.***

G. What is the current shoreline master program designation of the site?

***Currently there are no specific shoreline designations within the Yacolt area, however the area is within conservancy shoreline area designations.***

H. Has any part of the site been classified as an "environmentally sensitive" area? If so, please specify.

***There have been riparian and wetland habitat areas mapped by Clark County during the 2007 GMA update.***

I. How many people would reside or work in the completed project?

***Does not apply.***

J. How many people would the completed project displace?

***No displacement with this project.***

K. Please list proposed measures to avoid or reduce displacement impacts:

***NA***

L. List proposed measures to ensure the proposal is compatible with existing and projected land uses and plans:

***This project will fully support existing and projected land uses by providing sanitary sewer facilities.***

9. **HOUSING**

A. Approximately how many units would be provided? Indicate whether it's high, middle, or low income housing.

***None. Provision of sanitary sewer will relate in the potential for additional development and construction of new housing units.***

B. Approximately how many units, if any, would be eliminated? Indicate whether it's high, middle, or low-income housing.

***None.***

C. List proposed measures to reduce or control housing impacts:

***NA***

10. **AESTHETICS**

A. What is the tallest height of any proposed structure(s), not including antennas? What is proposed as the principal exterior building materials?

***NA***

B. What views in the immediate vicinity would be altered or obstructed?

***NA***

C. Proposed measures to reduce or control aesthetic impacts:

***NA***

11. **LIGHT AND GLARE**

A. What type of light or glare will be proposal produce? What time of day would it mainly occur?

***None.***

B. Could light or glare from the finished project be a safety hazard or interfere with views?

***NA***

C. What existing off-site sources of light or glare may affect your proposal?

***None.***

D. Proposed measures to reduce or control light and glare impacts:

***NA***

12. **RECREATION**

A. What designated and informal recreational opportunities are in the immediate vicinity?

***There are Town parks, ball fields and school yards within the Town limits. There are also potential rail uses for sight seeing excursions that commence from Yacolt, however this is a contracted use and is not always in operation.***

B. Would the project displace any existing recreational uses? If so, please describe.

***No.***

C. Proposed measures to reduce or control impacts on recreation, including recreational opportunities to be provided by the project or applicant:

***NA***

13. **HISTORIC AND CULTURAL PRESERVATION**

A. Are there any places or objects listed on or near the site which are listed or proposed for national, state, or local preservation registers? If so, please describe.

***None.***

B. Please describe any landmarks or evidence of historic, archaeological, scientific, or cultural importance known to be on or next to the site.

***None.***

C. Proposed measures to reduce or control impacts:

***No impacts anticipated.***

14. **TRANSPORTATION**

A. Identify public streets and highways serving the site, and describe proposed access to the existing street system. Show on site plans, if any.

***See attached maps for local streets.***

B. Is the site currently served by public transit? If not, what is the approximate distance to the nearest transit stop?

***Yes, the C-TRAN transit stop is on West Yacolt Road with two visits per day (am/pm).***

C. How many parking spaces would the completed project have? How many would the project eliminate?

***No parking spaces would be provided with this project.***

D. Will the proposal require any new roads or streets, or improvements to existing roads or streets, not including driveways? If so, please describe and indicate whether it's public or private.

***None with the proposal, but ultimately new roads will be constructed based on new construction.***

E. Will the project use water, rail, or air transportation? If so, please describe.

***No.***

F. How many vehicular trips per day would be generated by the completed project? Indicate when peak traffic volumes would occur.

***None.***

G. Proposed measures to reduce or control transportation impacts:

*NA*

15. **PUBLIC SERVICES**

A. Would the project result in an increased need for public services (e.g., fire protection, police protection, health care, schools, other)? If so, please describe.

*No.*

B. Proposed measures to reduce or control direct impacts on public services.

*NA*

16. **UTILITIES**

A. Circle the utilities currently available at the site: (Electricity), natural gas, (water), (refuse service), (telephone), sanitary sewer, (septic system), other.

B. Describe the utilities that are proposed for the project, the utility providing the service, and the general construction activities on or near the site.

***As a result of construction of the attached Capital Plan, sanitary sewer service will be provided by the Town.***

# C. SIGNATURE

The above answers are true and complete to the best of my knowledge. I understand that the lead agency is relying on them to make its decision.

Signature: Chuck McDonald

Date Submitted: January 20, 2009

# D. SEPA SUPPLEMENTAL SHEET FOR NON-PROJECT ACTIONS

**INSTRUCTIONS:**

Because these questions are very general, it may be helpful to read them in conjunction with the list of the elements of the environment. When answering these questions, be aware of the extent of the proposal and the types of activities likely to result from this proposal. Please respond briefly and in general terms.

1. How would the proposal increase discharge to water; emissions to air; production, storage, or release of toxic or hazardous substances; or production of noise? ***There would be no initial impact based on this project. Eventually construction will impact water and air by improving the treatment of effluent (vs. septic systems) and potentially creating minor air impacts.***

   Proposed measures to avoid or reduce such increases are: ***Water impacts would be improvements to the existing environment; air impacts would meet applicable permit requirements.***

2. How would the proposal be likely to affect plants, animals, fish, or marine life? ***There would be no impacts to plants, animals, fish or marine life within this project. Ultimately minor impacts will occur based on construction activity.***

   Proposed measures to protect or conserve plants, animals, fish, or marine life are: ***Appropriate guidelines will be followed and permits will be acquired for any construction and impacts that may be encountered.***

3. How would the proposal be likely to deplete energy or natural resources? ***There will be no impact to energy or natural resources by this project. Construction will marginally impact land, but should improve ground and surface water quality in the area.***

   Proposed measures to protect or conserve energy and natural resources are: ***The project will be designed with review of opportunities to reduce impacts and conserve energy.***

4. How would the proposal use or affect environmentally sensitive areas or those designated (or eligible or under study) for governmental protection; such as parks, wilderness, wild and scenic rivers, threatened or endangered species habitat, historic or cultural sites, wetlands, floodplains, or prime farmlands? ***No impacts will occur with this project. Resultant construction will review criteria for affected areas and should improve wetlands and floodplains by removing septic systems and reducing potential groundwater and surface water impacts.***

   Proposed measures to protect such resources or to avoid or reduce impacts are: ***The resultant construction projects will be constructed in accordance with governmental requirements.***

5. How would the proposal be likely to affect land and shoreline use? Will it allow or encourage land or shoreline uses incompatible with existing plans? ***No impacts will occur with this project. Resultant construction will not encourage uses incompatible with existing plans.***

Proposed measures to avoid or reduce shoreline and land use impacts are: ***The resultant construction projects will be constructed in accordance with governmental requirements.***

6. How would the proposal be likely to increase demands on transportation or public services and utilities? ***No impacts will occur with this project. While resultant construction may increase demands on transportation and utilities, the demand will be consistent with approved levels for the community.***

   Proposed measures to reduce or respond to such demand(s) are: ***Impacts from the resulting construction will be within the design parameters of the current improvements.***

7. Identify whether the proposal may conflict with local, state, or federal laws or requirements for the protection of the environment. ***The proposal is in compliance with requirements for federal, state and local laws to protect the environment.***

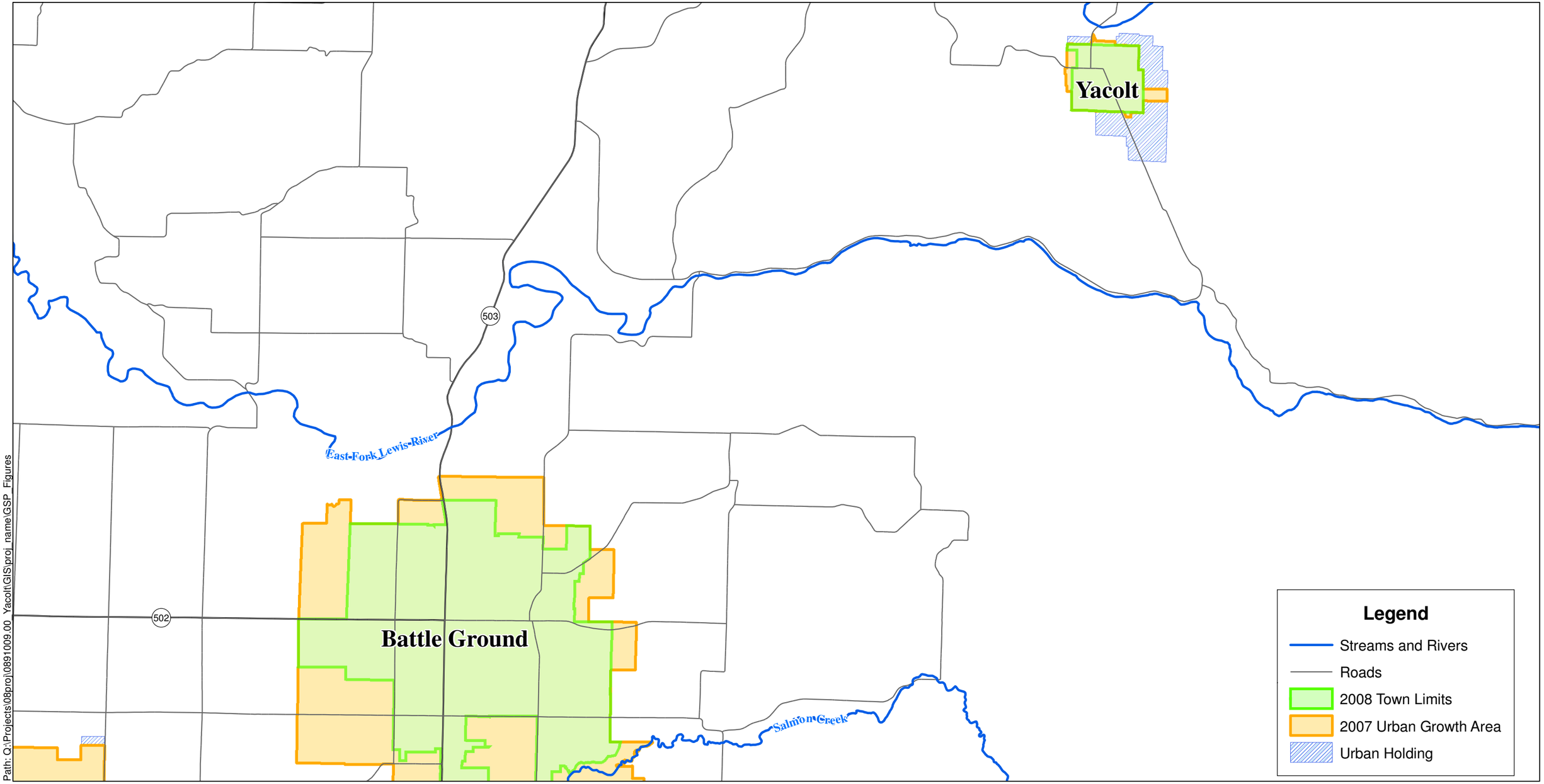


Path: Q:\Projects\08proj\0891009.00_Yacolt\GIS\proj_name\GSP_Figures

**Kennedy/Jenks Consultants**

Yacolt General Sewer Plan
Yacolt, Washington

N

0 5,000 10,000
Scale: Feet
1 inch = 1 mile

**Yacolt Vicinity**

K/J 0891009.00

**Figure 1**

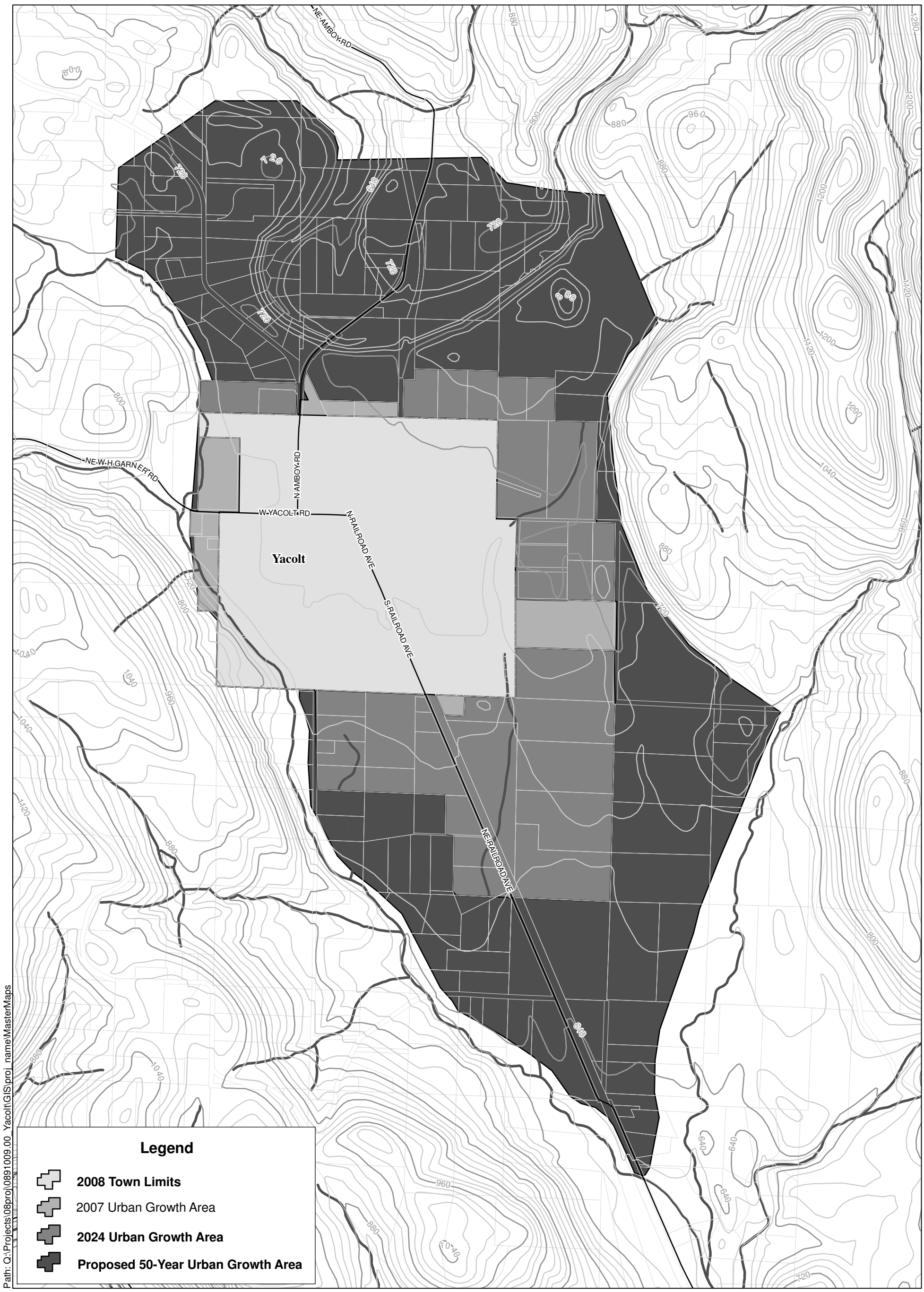


N

0 1,000 2,000

Scale: Feet
Contour Interval: 10 feet

**Kennedy/Jenks Consultants**

Yacolt General Sewer Plan
Yacolt, Washington

**Yacolt Area Topography**

K/J 0891009.00

**Exhibit**

proud past, promising future
CLARK COUNTY
WASHINGTON

COMMUNITY DEVELOPMENT

1300 Franklin Street • P.O. Box 9810 • Vancouver, WA 98666-9810 • tel: [360] 397-2375 • fax: [360] 397-2030 • www.clark.wa.gov

February 10, 2009

Mayor Joe Warren
City of Yacolt
PO Box 160 105 E. Yacolt Road
Yacolt, WA, WA 98675

RE: SEPA comments for the Yacolt Comprehensive General Sewer Plan (GSP)

Sir,

Included are a compilation of the comments gathered from the Clark County Departments of Planning, Public Works, and Community Development. These comments are furnished to help assist you in performing a more complete and accurate SEPA process:

1. A non-project supplemental form should be included because plan adoption is a non-project action.
2. The checklist does not discuss alternatives explored under the plan or whether the plan considered alternative methods of sewage disposal.
3. There is no document reference list nor is there documentation of the basis for the decision/determination.
4. Question 15a appears to incorrectly state "No" regarding increased public services. The adoption of a sewerage plan will cause cascading changes to the City including increased development in the urban growth area which will create an increase in ALL public services. In and of itself, at a minimum the adoption of a sewer plan will increase the need for sewer service upon implementation of the sewer plan. Public and private water source impacts could also be affected. The need for public infrastructure to operate and maintain the system represents a hefty public investment.
5. The new sewer system will ultimately result in a new sanitary sewer outfall and discharge (150,000 gallons/day) to a waterway. (East Fork or Yacolt Creek?) There should be a discussion of your status under the NPDES Municipal program. There should also be a discussion of Ecology's involvement regarding regulation/administration of the system.

If you have any questions regarding our input please feel free to contact me at 360-397-2375 x4180 or at Travis.Goddard@clark.wa.gov.

Respectfully,

Travis Goddard
Clark County Community Development
Development Services Team Leader

**Kennedy/Jenks Consultants**
**Engineers & Scientists**
200 S.W. Market Street, Suite 500
Portland, Oregon 97201
503-295-4911
FAX: 503-295-4901

30 March 2009

Travis Goddard
Clark County Community Development
Development Services Team Leader
P.O. Box 9810
Vancouver, WA 98666-9810

Subject: SEPA Checklist DNS – Clark County Response
Town of Yacolt
K/J 0891011.00

Dear Mr. Goddard:

Thank you for your response to the SEPA checklist document for the Yacolt General Sewer Plan (GSP) Determination of Non-Significance. In response to your comments, we offer the following information:

1. Comment: Lack of the non-project supplement.
   Response: The non-project supplement was included in the SEPA checklist; a copy is included with this document for your reference and information.

2. Comment: Discussion of alternatives explored.
   Response: The checklist refers to the General Sewer Plan; there are alternatives discussed and evaluated in the plan involving the multiple functions for provision of sanitary sewer including collection, treatment and discharge. This information was available at the locations described in the document (Fort Vancouver Library).

3. Comment. No document reference list.
   Response: The document is the General Sewer Plan and was discussed within the SEPA checklist. This information was available at the locations described in the document (Fort Vancouver Library).

4. Comment: Question 15a addressing need for additional utility services.
   Response: The logic for the response to question 15a discussing increased public services was related to the fact that approval of the General Sewer Plan alone will not increase public services. The Ecology process still requires the development and approval of a Facility Plan prior to any potential design or construction efforts. Adoption of the GSP will not change the sewer service within Yacolt as septic service will continue until funding can be obtained. Public and private water impacts will be positive but again there will be no impact provided by the GSP adoption.

5. Comment: Outfall – discharge questions related to location, NPDES permitting and Ecology regulations for such a discharge, .
   Response: Discharge, as discussed within the GSP, will be into one of the area waterways. The discharge point has not been determined at this time. Discussion has been held with Ecology (as well as Fish First and Clark County) and they are supportive of a discharge in either of the Lewis River forks (North or East). Definition of the discharge location will be provided in the Facility Plan upon its development. The issue related to an NPDES permit is still undetermined based on the potential of a standard waste discharge permit. Discussion of Ecology's oversight is discussed within the GSP and has been discussed as described and required in WAC 173..

If you are interested in a draft copy of the General Sewer Plan, we can provide this document to you. Again, thank you for your input.

Very truly yours,

KENNEDY/JENKS CONSULTANTS

Chuck McDonald
Senior Civil Engineer/NW Construction Manager

Enclosure

cc: Joe Warren, Mayor
Pete Roberts, Public Works Director

# Appendix F

## Cost Quotes for Treatment Facilities

Parkson
Treating Water Right

1401 West Cypress Creek Road
Suite 100
Fort Lauderdale, FL 33309-1969

# Preliminary Budget Proposal

| | | | |
|---|---|---|---|
| **To:** | Priya Dhanapal | **Date:** | January 6, 2011 |
| **Company:** | Kennedy/Jenks Consultants | **From:** | Robert E. Troupe |
| **Tel.:** | 503-423-4057 | **Tel.:** | 954-917-1819 |
| **cc:** | Rasor, Young, Reilly | | |
| **Subject:** | Parkson Biolac® Treatment System Preliminary Design & Cost Estimate for Town of Yacolt, WA | | |

As per your request, the following is a proposal for a Biolac-R Treatment System for the Town of Yacolt, WA project.

This preliminary Design and Cost Estimate is divided into the following sections:

I. Facility Background and Design Basis
   1. General Information
   2. Data Supplied
   3. Other Design Data and Assumptions

II. Process Design
   1. Basin Design
   2. Aeration Requirements
   3. Clarifier Design
   4. Influent Screen

III. Equipment and Services Provided

IV. Summary of Biolac Process

V. Cost Estimate and Terms

VI. Supplemental Information

Thank you for your interest in Parkson's Biolac Treatment System. We look forward to working with you on this project. Should you have any questions or need clarifications, please feel free to contact me at (954) 917-1819 Thanks.

Sincerely,

PARKSON CORPORATION
An Axel Johnson, Inc. Company

Robert E. Troupe
Sr. Applications Engineer
rtroupe@parkson.com

## PART 1 - FACILITY DESIGN BASIS

### 1.01 General Information

The Biolac Treatment System recommended below provides efficient and effective treatment of the waste stream in a highly cost-effective system. The system utilizes equipment and systems that can be maintained or repaired from the surface without the need to dewater or even shutdown the extended aeration basin. The design below covers the .29 (MGD) Design Average and .725 (MGD) Peak Daily flow (assumed) requirements. The treatment requirements are satisfied using two (2) earthen basins with integral clarifiers attached to the effluent end of the basin.

### 1.02 Data Supplied

Preliminary design work is based on the following parameters supplied by Priya Dhanapal:

A. Influent (Average)

| | | | |
|---|---|---|---|
| 1. | Flow | .29 | (MGD) |
| 2. | $BOD_5$ | 237.33 | mg/L |
| 3. | TSS | 237.33 | mg/L |
| 4. | TKN | 40 | mg/L |
| 5. | $NH_3$-N | 30 | mg/L |
| 6. | TP (estimate) | 8-12 | mg/L |

B. Desired Effluent (based upon monthly averages)

| | | | |
|---|---|---|---|
| 1. | $BOD_5$ | 10 | mg/L |
| 2. | TSS | 10 | mg/L |
| 3. | TKN | 1 | mg/L |
| 4. | $NH_3$-N | 1 | mg/L |
| 5. | TP | 2 | mg/L |

### 1.03 Other Design Data and Assumptions

In order to offer this proposal, Parkson Corporation must make the following assumptions. Deviations from these assumptions should be brought to the attention of the author of this proposal as they may require changes to it's content:

A. The wastewater will be pretreated to remove debris and grit using a Parkson Helisieve screen. Comminution is not recommended pretreatment.

B. Sufficient alkalinity is present or will be added to allow nitrification to proceed uninhibited.

C. The incoming oil, grease, chemical and metals concentrations are within treatable levels.

D. Sufficient nutrients (P, N, etc.) are present in the influent for biosolids growth or will be added by the plant operating staff.

E. A qualified operator will supervise plant activities and performance.

## PART 2 - PRELIMINARY PROCESS DESIGN

The following sections describe the components of the Biolac Treatment System. The main dimensions and features of the system are summarized in Table 1 in this section and illustrated in standard drawings found in Part 6.

### 2.01 Basin Design

Based on the design loading information described above the proposed Biolac System extended aeration basin(s) will be derived as follows:

A. The design criteria for the extended aeration/activated sludge basins is:

| | | | |
|---|---|---|---|
| 1. | F/M Ratio | 0.05 | |
| 2. | MLSS | 3000 | mg/l |
| 3. | HRT | 1.58 | days |
| 4. | SRT | 69 | days |

This process design results in reliable BOD removal and nitrification. The exceptional SRT maximizes process stability. Due to the large inventory of biological solids, wide swings in organic and hydraulic loads are managed without typical equipment or process adjustments. The excess biomass produced is well digested and stabilized, allowing many options for disposal.

The integral clarifier or clarifiers share a common wall with the basin. The design criteria for clarification is discussed in Section 2.03.

### 2.02 Aeration Design

A. The aeration requirements for the Biolac System are detailed in the attached print out "Oxygen Requirements" and are summarized in Table 1.

B. The estimated air and energy requirements and the number of BioFlex© moving aeration headers and BioFuser™ units estimated are given in Table 1. A typical BioFlex aeration header and BioFuser assembly is shown in Drawing SD-37.

C. The required air for both basins will be supplied by a total of two (2), 15 Hp positive displacement blowers. One (1) additional blower is provided as an installed spare. Only one (1) blower is necessary for mixing. Therefore, it is possible to operate one blower and cut energy usage substantially during periods of low load, such as nighttime operation. The blowers are expected to be located on a concrete pad next to the aeration basins or in a blower building as dictated by local requirements.

## 2.03 Clarifier Design

A. The biomass is separated from the mixed liquor in the clarifiers. A floating flocculating rake mechanism travels back and forth through the length of the clarifiers to aid in solids settling and distribution. Settled biomass is collected in the bottom of the clarifier by a stationary suction pipe and pumped by an airlift pump discharging to a channel and then the RAS piping. The biomass is returned to the influent zone of the activated sludge aeration basin via gravity flow. Biomass is wasted using an automated valve or pump system as dictated by the wasting method. The effluent leaves through a fixed v-notch overflow weir. Floating materials and debris are removed using a rotating scum removal system.

B. The clarifier dimensions and design criteria can be found in Table 1.

## 2.04 Influent Screen

A. For Town of Yacolt, WA, Parkson recommends the Helisieve in-channel screen Model HLS300. The Helisieve Screen provides fine screening (6mm) with conveying and compaction of the screened solids in one integral unit. It is installed in the influent channel and conveys and bags the compacted screenings to a specified receptacle for disposal. Redundant screen included.

B. The design for this application is summarized below:

1. Design Peak Flow .725 (MGD) assumed
2. Channel Width 16 in
3. Channel Depth 48 in

**Table 1**
Biolac Treatment System Preliminary Design Information
(Dimensions and Requirements are for Each Basin)

| | Biolac Extended Aeration Basin |
|---|---|
| Approximate Dimensions at Grade (ft) | 70 x 61 |
| Approximate Bottom Dimensions (ft) | 52 x 43 |
| Side Slope | 1.5:1 |
| Side Water Depth (ft) | 10 |
| Basin Volume (MG) | .23 |
| Clarifier Design Rise Rate at Design Flow (gpd/ft$^2$) | 371 |
| Integral Clarifier Size (ft) | 20 x 20 ea. |
| Number of Clarifiers per basin | 1 |
| Estimated SOR (lbs/hr) | |
| Nitrification-only | 52 |
| Estimated SCFM (excluding airlift requirements) | |
| Nitrification-only | 310 |
| Estimated Brake HP (excluding airlift requirements) | |
| Nitrification-only | 11 |
| # Diffusers | 60 |
| # BioFuser™ Assemblies | 15 |
| # BioFlex© Headers | 3 |

## PART 3 - EQUIPMENT AND SERVICES SUPPLIED

Parkson will supply the following equipment and services for the treatment system described above:

A. Complete BioFlex® moving chains with BioFuser® aeration units including, reinforced hi-temperature connecting hose, HDPE piping, restraining cable system and required hardware.

B. Electric motor actuated butterfly valves for individual control of each BioFlex aeration chain.

C. All air piping and fittings required between the aeration chains and the blowers. It is assumed the blowers will be located on concrete pads or in a blower building next to the aeration basin.

D. Qty three (3) complete, 15 Hp, blower assemblies (PD blowers) including motor and required backflow prevention valves, pressure gauges and accessories (includes one installed spare blower for redundancy).

E. All Integral clarifier equipment required including biosolids removal piping, airlift pump, flocculating mechanism, rotating scum removal pipe and overflow weir.

F. One dissolved oxygen probe and analyzer per basin.

G. Remote-mounted control system for operation of the Biolac Treatment System including control enclosure, VFDs, timers, relays and control switches for all motors, and components in the system. Dissolved oxygen monitoring and blower control are also provided.

H. Helisieve in-channel mechanical screen (6 mm openings) complete with standard accessories.

I. Project development and design drawings on AutoCAD disk, submittal package for approval and operation and maintenance manuals.

J. Final installation inspection, start-up supervision and operator training extended training and plant operation supervision is also available.

## PART 4 - SUMMARY OF BIOLAC PROCESS

A. The Biolac System is a unique extended aeration process characterized by excellent BOD removal, complete nitrification, and biosolids stabilization and is especially well suited for earthen basin applications.

B. It uses fine bubble membrane diffusers attached to floating aeration chains, which are moved across the basin propelled by the air release from the diffusers.

C. The moving aeration chains equipped with the BioFuser diffuser assemblies provide efficient mixing of the basin contents as well as high oxygen transfer at low energy usage.

D. There is no submerged aeration piping or any other components to be installed, leveled, or secured on the basin floor.

E. Each BioFlex chain can be individually controlled by it's air valve providing excellent flexibility in fine-tuning the system to the oxygen demand of the waste.

F. The individual control capability of the BioFlex chains is used to create alternating oxic and anoxic zones (Wave Oxidation) to allow denitrification in a single basin without internal mixed liquor recycle or complex controls.

G. The BioFlex chains with BioFusers do not contact or harm a basin liner or erode an unlined basin bottom.

H. A turndown capability of 50-70% during low loaded periods is typical without sacrificing mixing due to the movement of the BioFlex aeration chains.

I. Inspection and service of the BioFusers is done quickly and easily without dewatering the basin, keeping maintenance costs low and eliminating the need for redundant aeration basins.

J. Winter operation presents no difficulty as fine bubble diffusion beneath the water surface eliminates icing and minimizes wastewater cooling.

K. Earthen basins can be used rather than expensive concrete tanks making this extended aeration/activated sludge design the lowest cost alternative available on the market.

L. Energy efficiency is high reducing operating costs. The moving aeration chain design is not mixing limited so the horsepower required for mixing is typically ½ to ⅓ that required for aeration.

M. Integral clarifier(s) are installed using common-wall construction with the extended aeration basin to settle and recycle the stable extended aeration solids.

## PART 5 - COST ESTIMATE AND TERM

A. The budget price for the equipment and services supplied is **$540,000** FOB Factory, Freight Allowed.

B. Terms are 90% net 30, 10% upon startup.

C. Approval drawings-typically 6-8 weeks after receipt of written order.

D. Equipment Shipment - typically 16-20 weeks after complete release for manufacture.

## PART 6 - SUPPLEMENTAL INFORMATION AND REFERENCES

A. Biolac System Oxygen Requirements

B. Typical Drawings
   1. SD-1 "Flow Diagram (w/ DynaSand)"
   2. SD-37 "BioFlex Moving Aeration Chain with BioFuser Series 2004"
   3. SD-53 "Dual Basin Layout with Single Clarifier Layout (3' - 6" Hopper) Fixed Weir/Fixed Skimmer"
   4. SD-6 "Typical Moving Aeration Chain Connection"
   5. SD-7 "Anchor Post with Hook Detail"
   6. SD-8 "Positive Displacement Aeration Blower Assembly"
   7. SD-23 "Waste Valve Assembly"
   8. HLS300 "Helisieve Unit"
   9. DynaSand Budget Proposal

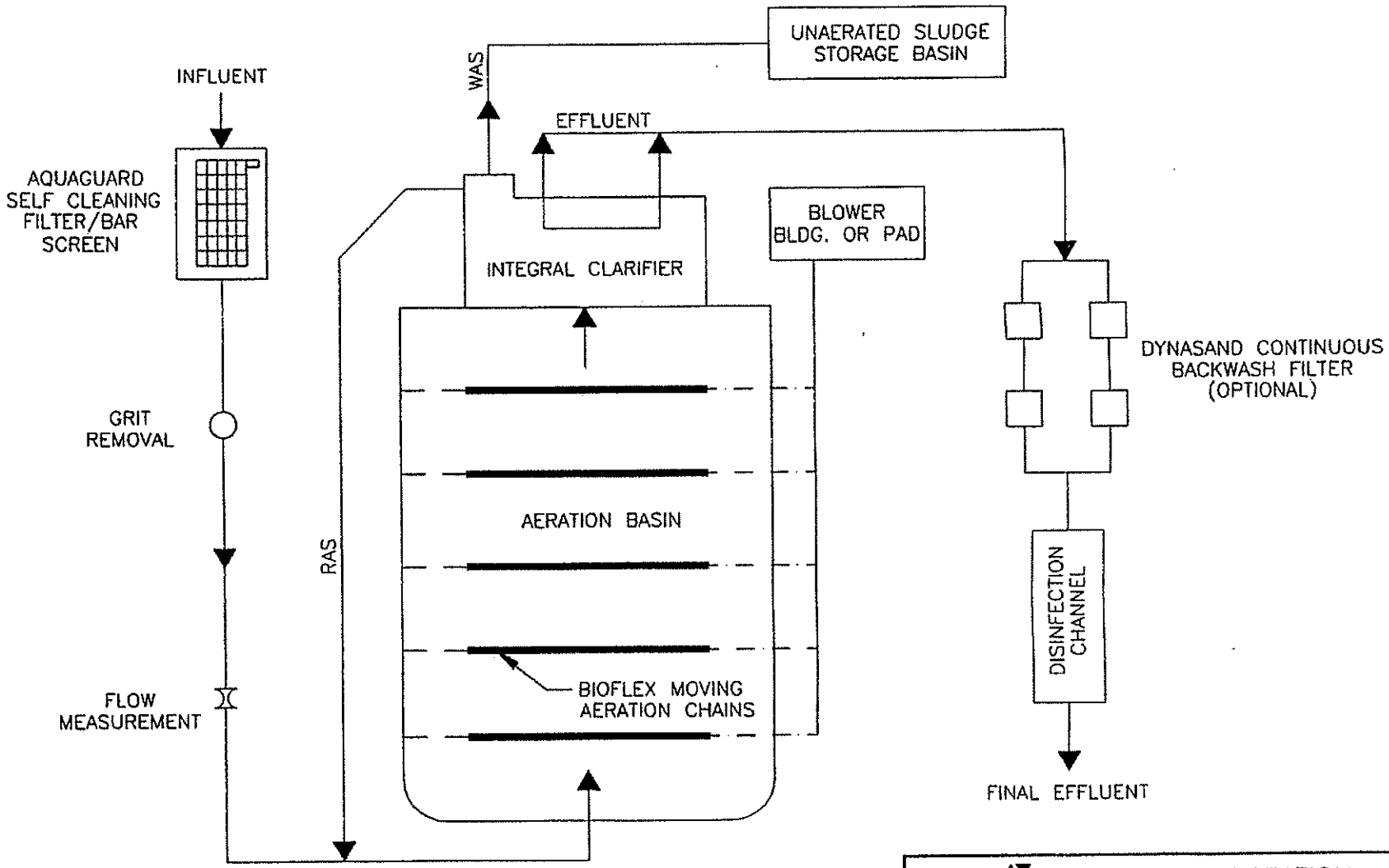


THE OWNER, PROJECT ENGINEER, AND ALL OTHERS INVOLVED WITH THE PROJECT DESIGN MUST IMPLEMENT AND FOLLOW ALL SAFETY STANDARDS REQUIRED BY LOCAL, STATE AND FEDERAL LAWS WHEN INCORPORATING PARKSON CORPORATION EQUIPMENT INTO THE OVERALL PROJECT DESIGN. PARKSON CORPORATION WILL NOT BE RESPONSIBLE FOR LOCATION AND/OR PLACEMENT OF EQUIPMENT IN THE PLANT DESIGN, NOR IS PARKSON RESPONSIBLE FOR PLANT SAFETY DESIGN AND FOR THE FAILURE TO FOLLOW APPROPRIATE SAFETY PRECAUTIONS IN THE OPERATION AND MAINTENANCE OF PARKSON CORPORATION EQUIPMENT.

PARKSON CORPORATION

BIOLAC LONG SLUDGE AGE SYSTEM
FLOW DIAGRAM

| | | | | | |
|---|---|---|---|---|---|
| Drawn By G.C. | Checked By | Approved By | Micro Rev. | CAD No. SD1 | Loc status SD1 |
| Date 2/1/96 | Date | Date | Date | DWG Scale NONE | CAD int scale 1 |
| Location | | | Dwg. No. SD-1 | | Rev A |

This drawing and all appurtenant matter contains information proprietary to PARKSON CORPORATION and is loaned subject to return upon demand and must not be reproduced, copied, loaned, revealed nor used for any purpose other than that for which it is specifically furnished without expressed written consent of PARKSON CORPORATION.

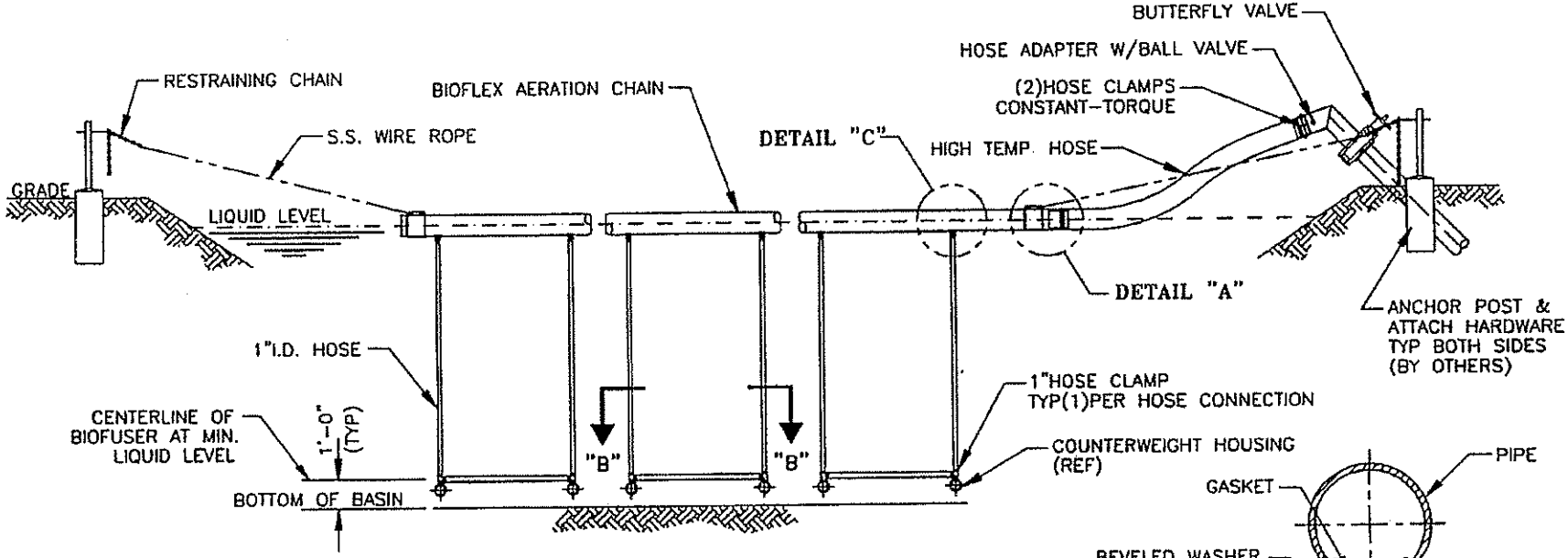


ELEVATION (BIOFLEX/BIOFUSER ASS'Y)

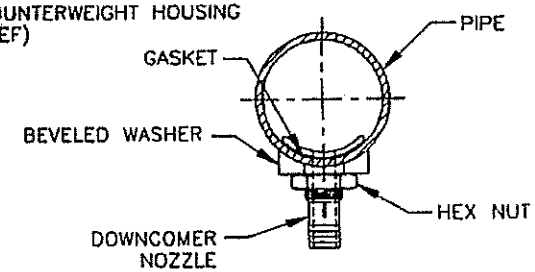


DETAIL "C"

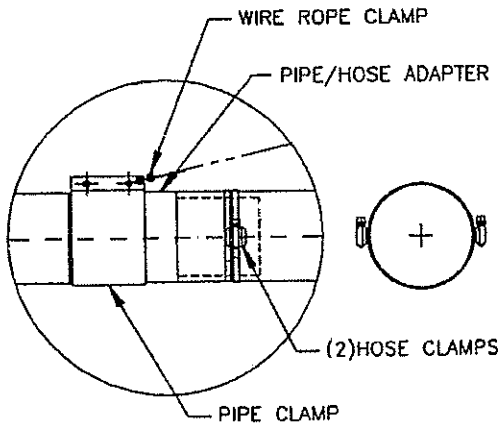


DETAIL "A"

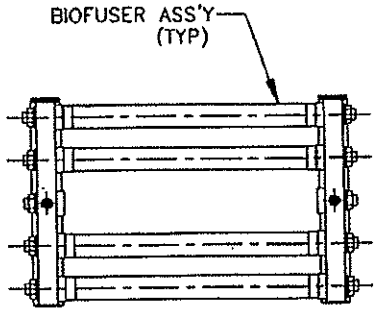


VIEW "B-B"

NOTES:

1. CIVIL & CONCRETE DESIGN NOT BY PARKSON CORP.
2. TWO(2)HOSE CLAMPS TO BE INSTALLED AT EACH HOSE CONNECTION. WHEN TIGHTENED, WORM GEARS SHOULD BE 180° FROM EACH OTHER.
3. BIOFLEX WILL BE PROVIDED IN STANDARD LENGTHS. FUSION WELDING & DRILLING DOWNCOMER HOLE IN FIELD WILL BE REQUIRED BY CONTRACTOR.

PARKSON CORPORATION

BIOLAC LONG SLUDGE AGE SYSTEM
BIOFLEX MOVING AERATION CHAIN
WITH BIOFUSER SERIES 2004

| | | | | | |
|---|---|---|---|---|---|
| Drawn By G.C. | Checked By | Approved By | Micro Rev. | CAD No. SD-33 | Loc. status LS |
| Date 2/1/96 | Date | Date | Date | DWG Scale NONE | CAD int scale 64 |
| Location | | | Dwg. No. SD-37 | | Rev A |

This drawing and all appurtenant matter contains information proprietary to PARKSON CORPORATION and is loaned subject to return upon demand and must not be reproduced, copied, loaned, revealed nor used for any purpose other than that for which it is specifically furnished without expressed written consent of PARKSON CORPORATION.

This drawing and all appurtenant matter contains information proprietary to PARKSON CORPORATION and is loaned subject to return upon demand and must not be reproduced, copied, loaned, revealed nor used for any purpose other than that for which it is specifically furnished without expressed written consent of PARKSON CORPORATION.

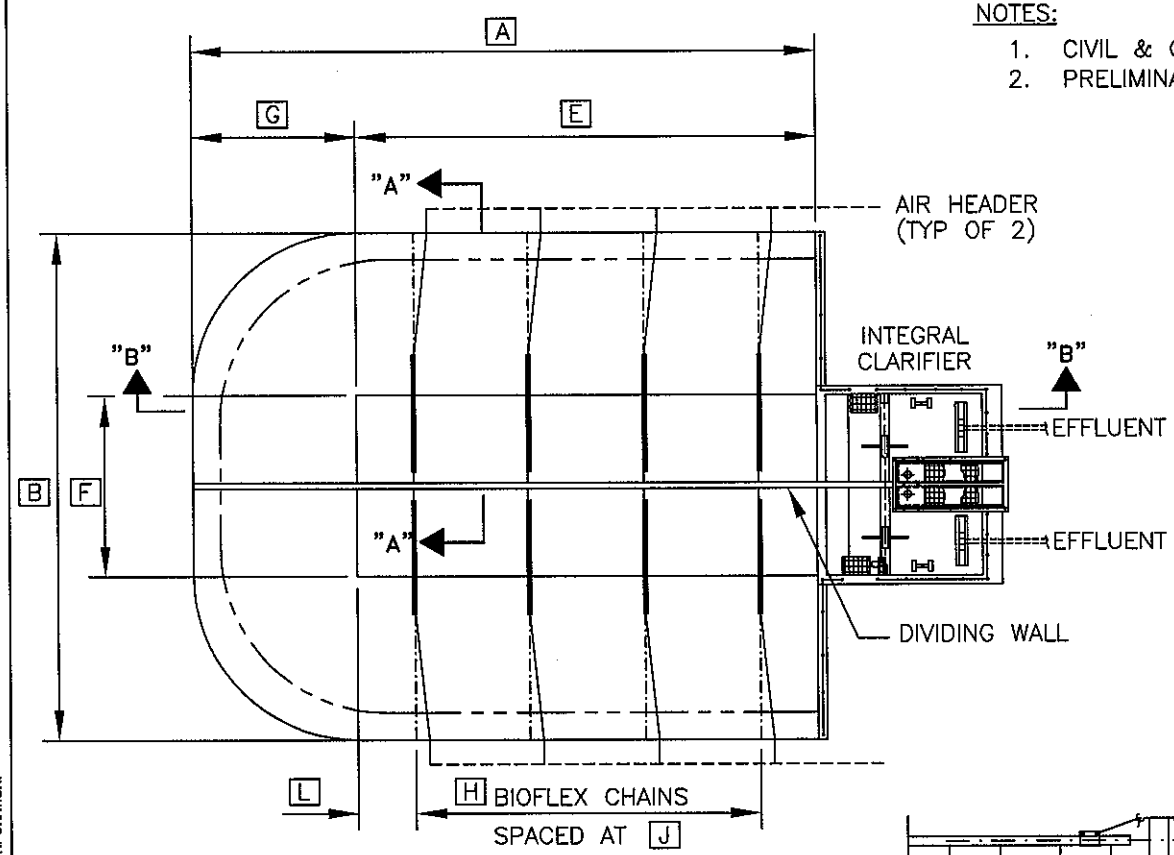


NOTES:

1. CIVIL & CONCRETE DESIGN NOT BY PARKSON CORP.
2. PRELIMINARY DWG, NOT FOR CONSTRUCTION.

| ITEM | DESCRIPTION | DIM |
|---|---|---|
| A | BASIN LENGTH (ft) | |
| B | BASIN WIDTH (ft) | |
| C | FREEBOARD (ft) | |
| D | SIDE WATER DEPTH (SWD) (ft) | |
| E | BASIN BOTTOM LENGTH (ft) | |
| F | BASIN BOTTOM WIDTH (ft) | |
| G | BASIN SLOPE LENGTH (ft) | |
| H | NUMBER OF CHAINS | |
| J | SPACING BETWEEN CHAINS (ft) | |
| K | WALL SLOPE | |
| L | DISTANCE TO 1st CHAIN (ft) | |
| M | NUMBER OF BLOWERS | |
| N | SCFM EACH BLOWER | |
| P | TOTAL SCFM | |
| R | BLOWER DISCHARGE PRESS. (PSIG) | |

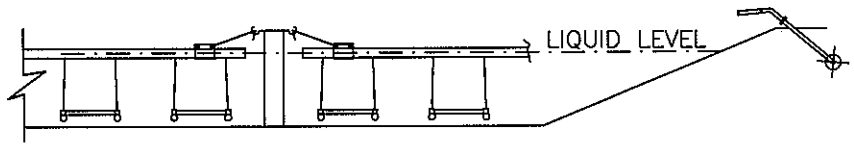


VIEW "A-A"

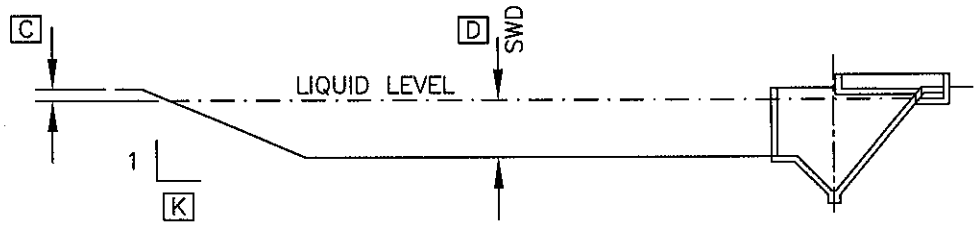


VIEW "B-B"

PARKSON CORPORATION

BIOLAC LONG SLUDGE AGE SYSTEM
GENERAL ARRANGEMENT DUAL BASIN W/WING WALLS

| Drawn By G.C. | Checked By | Approved By | Micro Rev. | CAD No. SD53 | Loc. status |
|---|---|---|---|---|---|
| Date 12/28/99 | Date | Date | Date | DWG Scale 1"=30' | CAD int scale 360 |
| Location | | | Dwg. No. SD-53 | | Rev. |

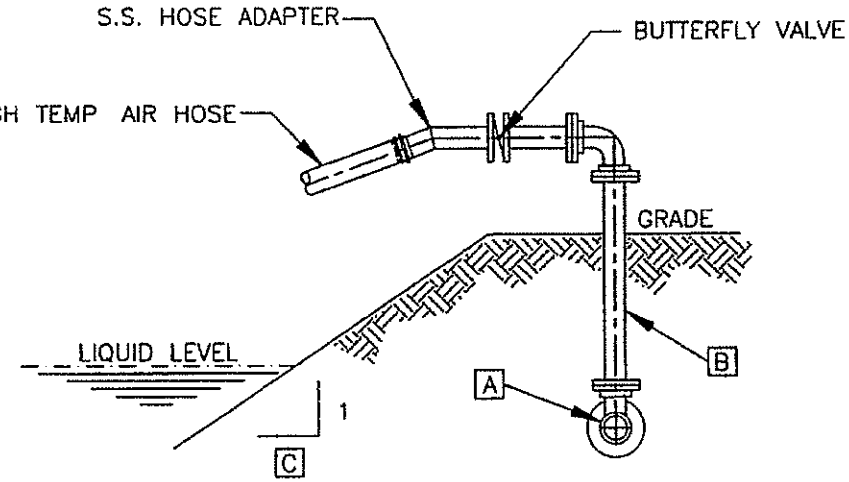


OPTION #1

| ITEM | DESCRIPTION | DIM |
|---|---|---|
| A | AIR HEADER DIAMETER | |
| B | AIR FEED PIPE DIAMETER | |
| C | WALL SLOPE | |

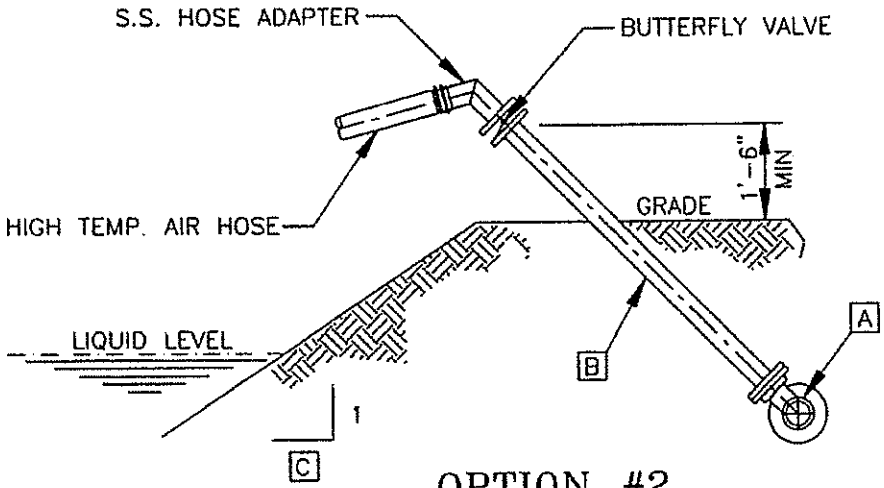


OPTION #2

PARKSON CORPORATION

BIOLAC LONG SLUDGE AGE SYSTEM
TYPICAL MOVING AERATION CHAIN CONNECTION

| Drawn By G.C. | Checked By | Approved By | Micro Rev. | CAD No. SD6 | Loc. status LS |
|---|---|---|---|---|---|
| Date 2/1/96 | Date | Date | Date | DWG Scale NONE | CAD int scale 32 |
| Location | | | Dwg. No SD-6 | | Rev A |

This drawing and all appurtenant matter contains information proprietary to PARKSON CORPORATION and is loaned subject to return upon demand and must not be reproduced, copied, loaned, revealed nor used for any purpose other than that for which it is specifically furnished without expressed written consent of PARKSON CORPORATION.

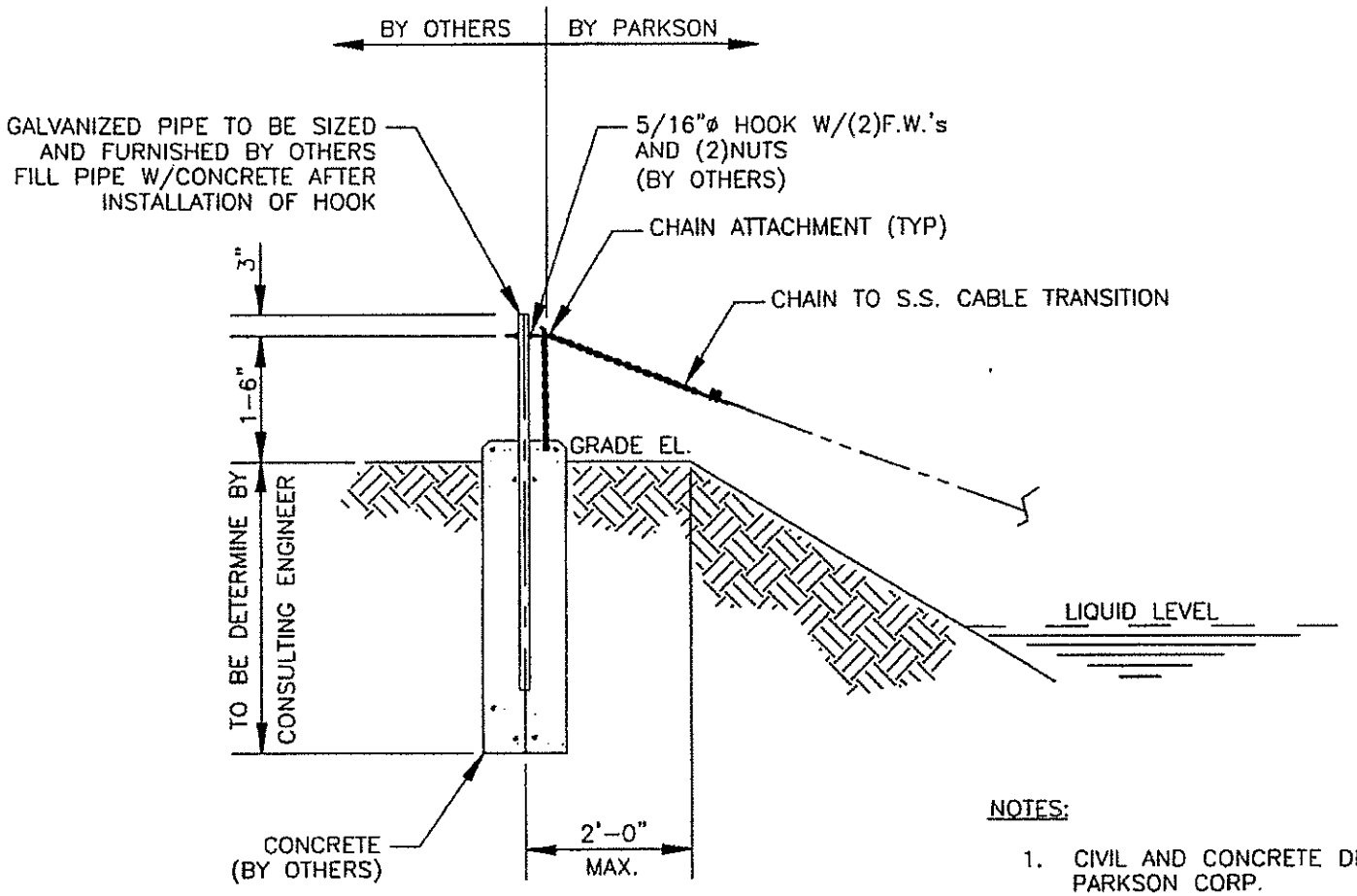


NOTES:

1. CIVIL AND CONCRETE DESIGN NOT BY PARKSON CORP.
2. PRELIMINARY DWG., NOT FOR CONSTRUCTION.

PARKSON CORPORATION

BIOLAC LONG SLUDGE AGE SYSTEM
ANCHOR POST W/HOOK DETAIL

| | | | | | |
|---|---|---|---|---|---|
| Drawn By G.C. | Checked By | Approved By | Micro Rev. | CAD No SD7 | Loc. status LS |
| Date 2/1/96 | Date | Date | Date | DWG Scale NONE | CAD int scale 24 |
| Location | | | Dwg No. SD-7 | | Rev A |

This drawing and all appurtenant matter contains information proprietary to PARKSON CORPORATION and is loaned subject to return upon demand and must not be reproduced, copied, loaned, revealed nor used for any purpose other than that for which it is specifically furnished without expressed written consent of PARKSON CORPORATION.

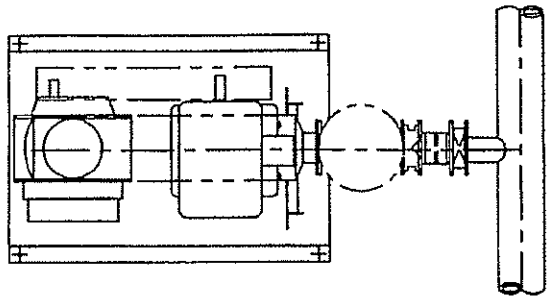

PLAN

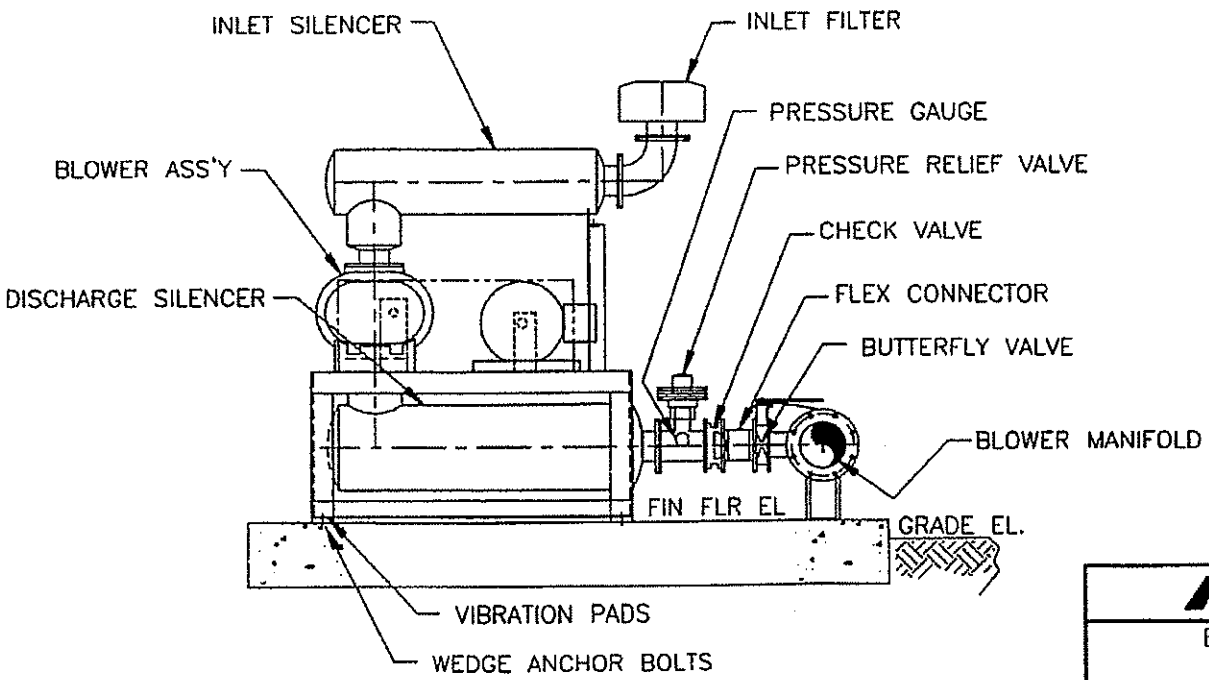


ELEVATION

PARKSON CORPORATION

BIOLAC LONG SLUDGE AGE SYSTEM
POSITIVE DISPLACEMENT
AERATION BLOWER ASS'Y

| Drawn By | Checked By | Approved By | Micro Rev. | CAD No. | Loc. status |
|---|---|---|---|---|---|
| G.C. | | | | SD8 | |
| Date 2/1/98 | Date | Date | Date | DWG Scale NONE | CAD int scale 32 |
| Location | | | Dwg. No. SD-8 | | Rev. A |

This drawing and all appurtenant matter contains information proprietary to PARKSON CORPORATION and is loaned subject to return upon demand and must not be reproduced, copied, loaned, revealed nor used for any purpose other than that for which it is specifically furnished without expressed written consent of PARKSON CORPORATION.

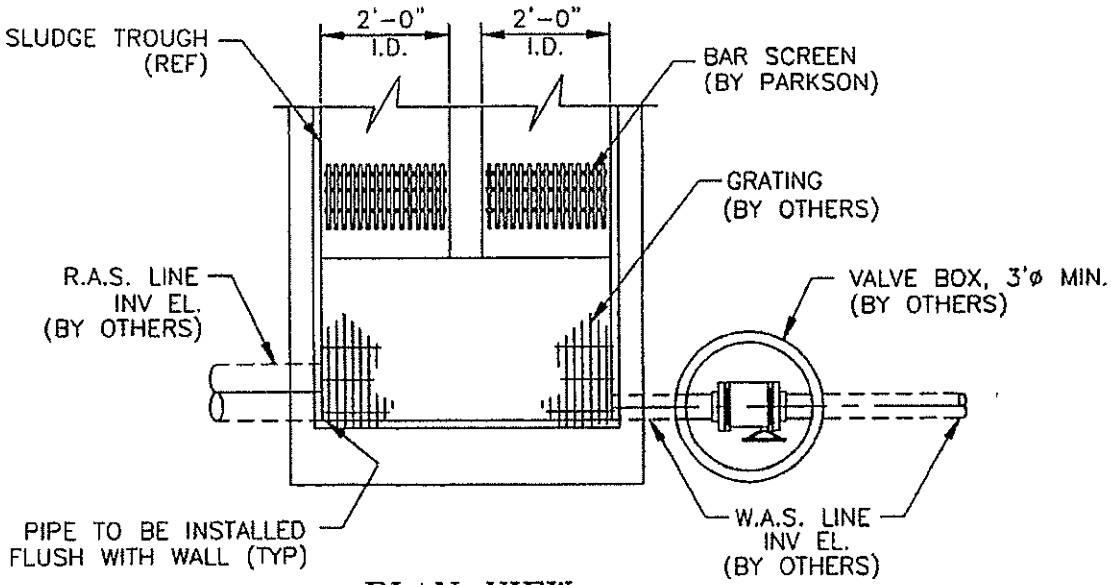


PLAN VIEW

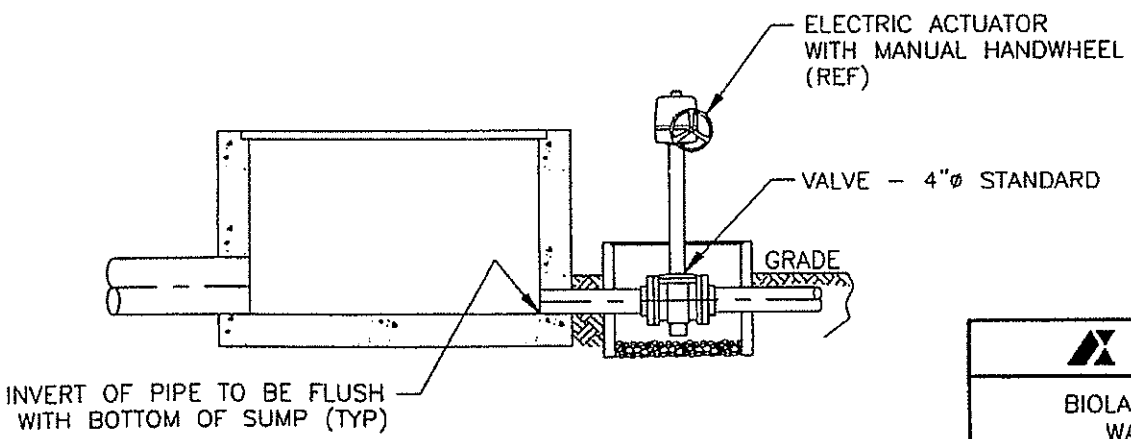


ELEVATION
(WALL OMITTED FOR CLARITY)

PARKSON CORPORATION

BIOLAC LONG SLUDGE AGE SYSTEM
WASTE SLUDGE VALVE ASS'Y

| Drawn By G.C. | Checked By | Approved By | Micro Rev. | CAD No SD23 | Loc Status |
|---|---|---|---|---|---|
| Date 2/1/96 | Date | Date | Date | DWG Scale | CAD unit scale 32 |
| Location | | | Dwg. No SD-23 | | Rev A |

This drawing and all appurtenant matter contains information proprietary to PARKSON CORPORATION and is loaned subject to return upon demand and must not be reproduced, copied, loaned, revealed nor used for any purpose other than that for which it is specifically furnished without expressed written consent of PARKSON CORPORATION.

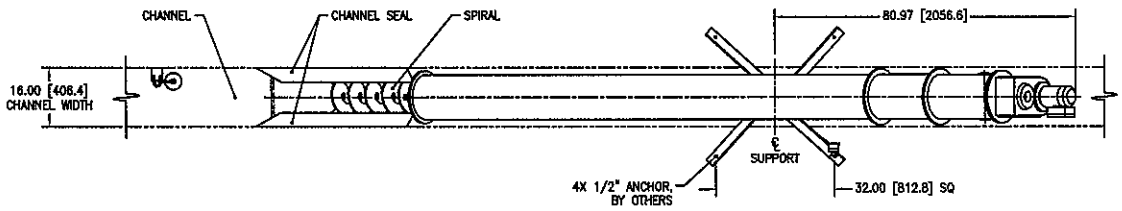


TOP VIEW

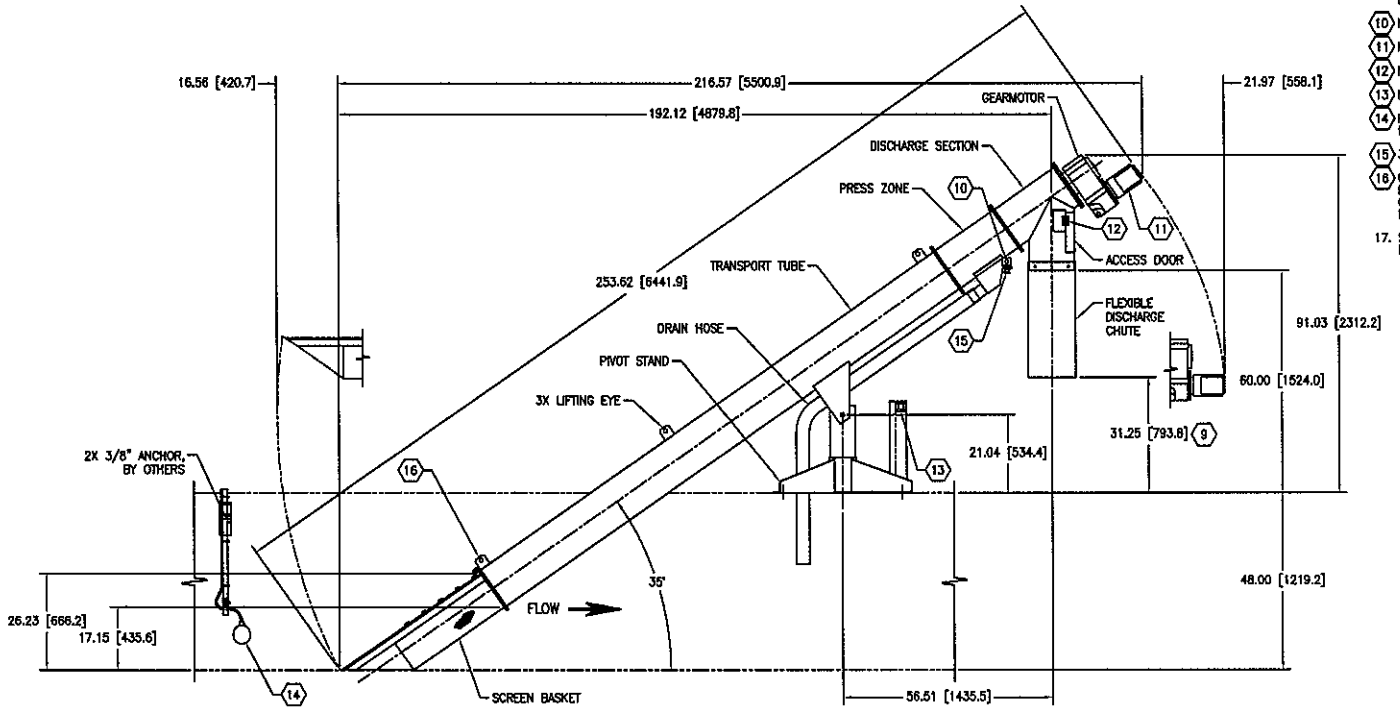


SIDE VIEW
(CHANNEL SEALS NOT SHOWN)

NOTE:

1. ALL 304L STAINLESS STEEL CONSTRUCTION EXCEPT FOR REDUCER, MOTOR, SPIRAL, ELECTRICAL FIXTURES, DISCHARGE CHUTE, AND CHANNEL SEALS.
2. GEARMOTOR: 1 HP [.75 kW], 1800 RPM, 230/460 V, 3 PH, 60 HZ, TEFC, SEVERE DUTY.
3. SPIRAL SPEED: 7.5 RPM.
4. SCREEN OPENING: #.25 [#6.4].
5. RECOMMENDED CLEARANCE TO BE 36.00 [914.4] AROUND AND ABOVE UNIT.
6. WEIGHT: 1,545 LB [700 kg].
7. DIMENSIONS WRITTEN IN INCHES [mm] UNLESS OTHERWISE SPECIFIED.
8. PROVIDE SUFFICIENT FLEXIBILITY IN WATER AND ELECTRICAL CONNECTIONS TO ALLOW THE UNIT TO PIVOT OUT OF THE CHANNEL. ALL INTERCONNECTING WIRING, CONDUIT AND PIPING FROM UNIT MOUNTED DEVICES WILL BE SUPPLIED BY OTHERS.

(9) GROUND CLEARANCE FOR DISCHARGE RECEPTACLE. DO NOT REMOVE FLEXIBLE DISCHARGE CHUTE/GUARD.

(10) NEMA 4X SOLENOID VALVE: 1/2" NPT CONDUIT CONNECTION.

(11) MOTOR: 2X 1/2" NPT CONDUIT CONNECTION.

(12) NEMA 4X INTERLOCK SWITCH: 6 FOOT [1.8 M] LONG INTEGRAL CABLE.

(13) NEMA 4X LOCAL E-STOP: 1/2" NPT CONDUIT CONNECTION.

(14) FLOAT SWITCH: 20 FOOT [6.1 M] LONG INTEGRAL CABLE (MOUNTING BRACKET INCLUDED; 1" PIPE PROVIDED BY OTHERS).

(15) 3/4" NPT WATER SPRAY CONNECTION.

(16) UNIT IS BASKET END HEAVY. CUSTOMER MUST PROVIDE LIFTING DEVICE TO PIVOT UNIT OUT OF CHANNEL. LIFTING CAPABILITY MUST EQUAL A MINIMUM OF 60% OF UNIT WEIGHT, APPLIED AT LIFTING POINT SHOWN. CHANNEL MUST BE EMPTY AND SCREEN BASKET CLEAR OF SOLIDS.

17. STANDARD UNIT SHOWN. CONSULT PARKSON CORPORATION OR YOUR LOCAL HYCOR PRODUCTS REPRESENTATIVE FOR AVAILABLE OPTIONS.

PARKSON CORPORATION

The Owner, Project Engineer, and all others involved with the project design must implement and follow all safety standards required by local, state and federal laws when incorporating Parkson Corporation equipment into the overall project design. Parkson Corporation will not be responsible for location and/or placement of equipment in the plant design, nor is Parkson Corporation responsible for plant safety design and for the failure to follow appropriate safety precautions in the operation and maintenance of Parkson Corporation equipment.

| REV | DESCRIPTION | DATE | BY |
|---|---|---|---|

| DRAWN BY | DATE | REFERENCE INFORMATION |
|---|---|---|
| CHECKED BY | DATE | REV DATE: 03/30/04 |
| SCALE 1/32" = 1" | | INFORMATION ONLY |

PROJECT NAME

TITLE: HLS300 HYCOR® HELISIEVE® UNIT

DRAWING NO

REV

This drawing and all appurtenant matter contains information proprietary to PARKSON CORPORATION and is loaned subject to return upon demand and must not be reproduced, copied, loaned, revealed, nor used for any purpose other than that for which it is specifically furnished without expressed written consent of PARKSON CORPORATION.

**From:** Jeff Belnap [jeff@selg.us]
**Sent:** Tuesday, January 11, 2011 9:18 AM
**To:** Priya Dhanapal
**Cc:** 'Kevin Allen'; 'Jon Anderson'; gselg@SELG.us
**Subject:** Yacolt, WA Lagoon Liners

Good Morning Priya;

On behalf of Environmental Fabrics, Inc. we thank you for the opportunity to provide you with a budgetary quotation for the two 70' x 61' (approx. dimensions) lagoon basins.

2) Double 60 mil smooth HDPE Liners w/Geocomposite moisture detection layer between w/ 2 pipe boots:…….$ 95,000.00

Price includes; Materials, 2' x 2' anchor trough, freight, and installation.

Priya, if and when you require additional details and information please let me know. Any questions give me a call.

Kind Regards,

Jeff W. Belnap
Sales Engineer
Selg & Associates
786 Vincent Street
Eugene, OR 97401
Ph: 425-892-3778
Fx: 425-354-3125
www.selg.us

Parkson
Treating Water Right
2727 NW 62nd Street, Fort Lauderdale, FL 33309
tel: (954) 974-6610 fax: (954) 974-6182

# DYNASAND® CONTINUOUS BACKWASH SAND FILTER

## Preliminary BUDGET Sizing
## Yacolt, WA

**APPLICATION :** **P Removal**

**DESIGN DATA**

| | | | | | |
|---|---|---|---|---|---|
| Peak: | **201** gpm | = | **0.29** mgd | | |
| Influent Solids: | **10** mg/L TSS | | | Effluent Criteria*: | **5** mg/L TSS |

* - All effluent limits may require chemical addition (by others)

**RECOMMENDATIONS:**

**1** DynaSand Model DSF78 DBTF Package unit

| | | | | |
|---|---|---|---|---|
| Filtration Area per unit | | **78** ft$^2$ | | |
| Loading Rate: | Peak: | **2.58** gpm/ft2, all units in service | Total filtration area | **78** ft$^2$ |
| Filtration depth | | **80** in. | | |
| Sand required per unit | | **41.5** | Total sand requirement | **41.5** tons |
| Design headloss across filter | | **48** in. WC | Typical headloss across filter | **18** to **24** inches |
| Total air consumption | | **4.2** scfm | Recommended Compressor Package: | **Reciprocating** |
| | | | Package #: | **T30-4DD** |
| | | | Ingersoll-Rand Model : | **2-2475E5** |
| | | | Motor horsepower: | **5** hp |
| Total reject flow per unit | **12** to | **20** gpm continuous (on average) | Qty: | **1** |
| Package filter dimensions: | | **10.0** ft dia. x **22.75** ft high | | |

**MATERIALS**

| | |
|---|---|
| Tank: | **304SS** |
| Feed Assembly : | **304L SS** |
| Hardware: | **304SS** |
| Reject compartment: | **FRP** |
| Airlift pump: | **PVC** |

**SCOPE**

All filter internals, filter media
Local headloss gauge, low level float switch, NEMA 4X air control panel.
Access Ladder & Platform
Compressor package for with desiccant dryer supplied by Parkson.
Start-up visit including travel & living expenses.

**BUDGET PRICING** **$306,000** USD, FOB factory - Equipment & sand freight allowed, taxes extra.

**SHIPMENT**

**Submittals 4 weeks after receipt of written purchase order.**
**Shipment 13 weeks after receipt of approved drawings or submittal waiver.**

**From:** Bill Reilly [mailto:bill@whreilly.com]
**Sent:** Friday, January 07, 2011 4:50 PM
**To:** Priya Dhanapal
**Cc:** Griffin Johnson
**Subject:** Re: Parkson Biolac and DynaSand - Yacolt, WA

Priya,

Yes, the effluent from the DynaSand will be at or below 0.1 mg/l P with alum feed ahead of the filters.

Bill

----- Original Message -----
From: Priya Dhanapal <PriyaDhanapal@KennedyJenks.com>
To: Bill Reilly
Cc: Griffin Johnson
Sent: Fri Jan 07 16:41:03 2011
Subject: RE: Parkson Biolac and DynaSand - Yacolt, WA

Thanks, Bill.

Could you please confirm that the Dynasand will be able to produce an effluent with phosphorus levels in the 0.1-1 mg/L range (with its influent coming from the Biolac-Clarifier process that's mentioned in the proposal)?

Thanks,

Priya Dhanapal, P.E.
Kennedy/Jenks Consultants
Water Environment Group
200 SW Market St., Ste 500
Portland, OR 97201
(Tel : 503-295-4911
(Dir : 503-423-4057
(Fax: 503-2954901
ýWeb: http://www.KennedyJenks.com <http://www.kennedyjenks.com/>
<mailto:PriyaDhanapal@KennedyJenks.com>

---

From: Bill Reilly [mailto:Bill@whreilly.com]
Sent: Friday, January 07, 2011 12:09 PM
To: Priya Dhanapal
Cc: Griffin Johnson
Subject: Parkson Biolac and DynaSand - Yacolt, WA

Priya,

I apologize for the delay in getting this redesign for you. Please see below and attached from Parkson.

Thanks.

Bill
Bill Reilly | Wm. H. Reilly & Co.
503-223-6197 Office | 503-223-0845 Fax | 503-314-8386 Cell
Bill@whreilly.com

------ Forwarded Message
From: Rob Troupe <RTroupe@parkson.com>
Date: Thu, 6 Jan 2011 18:24:08 -0800
To: Bill Reilly <billjr@whreilly.com>
Cc: Steve Young <syoung@parkson.com>, Joe Nagel <jnagel@parkson.com>
Subject: Yacolt, WA

Bill,

The Biolac sizing is based on the following:

Maximum Monthly flow of .29 MGD split evenly between two Biolac's. The Two Biolac Basins are separated by a concrete wall and each basin will have its own dedicated clarifier. Please refer to Drawing Number SD-53.
The revised sizing does not include Wave-Ox controls. Phosphorus will be removed via chemical addition of alum used in conjunction with DynaSand Filtration.

Priya requested that we supply a redundant screen to handle an estimated peak flow of .725 MGD.

Revised budget price for the Biolac and Helisieves: $540,000. ($395,000 for the Biolac and $145,000 for the Helisieves)
Note that the previous budget was $543,000 for one Biolac Basin with Wave-Ox controls and one Helisieve screen. The Biolac price was greatly reduced with the elimination of Wave-OX controls and was offset by the addition of a redundant Helisieve Model HLS400.

The DyanSand Budget Proposal was based on the following:

One (1) DynaSand DSF78DBTF sized to handle the maximum monthly flow of .29 MGD. Priya also requested a redundant SandFilter.

Revised budget price for two (2) DSF78DBTF units is $525,000.

Total Budget Price: $1,065,000.

If you have any questions or comments please let me know.

Sincerely,

Rob

Rob Troupe | Senior Applications Engineer | Parkson | +1 954.917.1819| www.parkson.com
<http://www.parkson.com/>

Enviroquip
a division of Eimco Water Technologies

# Design Summary

**Yacolt WWTP (MMF 0.29 MGD)**

| Basis of Design | | | | |
|---|---|---|---|---|
| **Parameter** | **Flow** | **Temperature** | **Typical Event Duration** | **Design Durations** |
| **Average Annual Flow (AAF)** | 0.22 MGD * | 15 ℃ * | 9 consecutive months | 9.0 months * |
| **Max Month Flow (MMF)** | 0.29 MGD | 10 ℃ * | 3 consecutive months | 3.0 months * |
| **Peak Week Flow (PWF) **** | 0.35 MGD * | 10 ℃ * | 3 non-consecutive weeks | 3.0 weeks * |
| **Peak Day Flow (PDF) **** | 0.58 MGD * | 10 ℃ * | 8 non-consecutive days | 8.0 days * |
| **Peak Hourly Flow (PHF) **** | 0.73 MGD | 10 ℃ * | 4 hrs with 24 hrs between PHF | 1.0 hours * |

| Parameter | Influent | Effluent Limits |
|---|---|---|
| **BOD** | 238 mg/L | < 10 mg/L |
| **TSS** | 238 mg/L | < 10 mg/L |
| **TKN** | 40 mg/L | < 3 mg/L * |
| **$NH_3$** | 35 mg/L | < 1 mg/L |
| **TP** | 7.5 mg/L | < 0.5 mg/L |
| **TN** | 40 mg/L * | < 10 mg/L |
| **Alkalinity** | 300 mg/L * | < 75 mg/L * |
| **Maximum Wastewater Temperature** | 25 ℃ * | |
| **Elevation** | 710 ft * | |

* Value assumed by Enviroquip, to be verified by consulting engineer.

** Peak values assumed to occur during MMF, to be verified by consulting engineer.

| MBR Zone (Membrane) Design | | |
|---|---|---|
| **Parameter** | **Value** | **Notes** |
| **No. of Membrane Basins** | 2 | |
| **No. of Membrane Rows per Basin** | 1 | |
| **No. of Membrane Units per Basin** | 5 | 10 units total |
| **Membrane Unit Type** | RM-200 | cartridge: 515HP |
| **No. of Cartridges per Unit** | 200 | 2,000 membrane cartridges total |
| **Surface Area per Cartridge** | 15.60 ft2/cartridge | |
| **Flux @ 0.22 MGD (AAF)** | 7.16 gal/(ft2 x day) | |
| **Flux @ 0.29 MGD (MMF)** | 9.29 gal/(ft2 x day) | |
| **Flux @ 0.35 MGD (PWF)** | 11.15 gal/(ft2 x day) | |
| **Flux @ 0.58 MGD (PDF)** | 18.59 gal/(ft2 x day) | |
| **Flux @ 0.73 MGD (PHF)** | 23.24 gal/(ft2 x day) | |
| **Membrane Basin Volume** | 19,373 gal/basin | 14ft x 18.5ft x 10ft SWD |
| **Membrane Air Scour Rate for Sizing** | 60 scfm/unit | @ 5.1 PSIG discharge |
| **AOR Supplied by Air Scour** | 274 lb O2/day | TMP Ranges from .5 - 3.0 PSI |
| **MBR Basin MLSS** | 10,000 mg/L | |

Enviroquip
a division of Eimco Water Technologies

# Design Summary

**Yacolt WWTP (MMF 0.29 MGD)**

| Anoxic Zone Design | | |
|---|---|---|
| **Parameter** | **Value** | **Notes** |
| **Basin Volume** | 46,655 gal/basin | 46,655 gal total |
| **Basin Dimensions** | 18ft x 38.5ft x 9ft SWD | |
| **Anoxic MLSS** | 8,250 mg/L | |
| **Recycle Rate** | 4.8 Q | From MBR to Anoxic Basin |

| Pre-Aeration Zone Design | | |
|---|---|---|
| **Parameter** | **Value** | **Notes** |
| **Basin Volume** | 79,991 gal/basin | 79,991 gal total |
| **Basin Dimensions** | 25.3ft x 38.5ft x 11ft SWD | |
| **Pre-Aeration MLSS** | 8,250 mg/L | |
| **Fine Bubble Diffuser AOR** | 632 lb O2/day | |

| MBR Waste Activated Sludge Production Parameters | | |
|---|---|---|
| **Parameter** | **Value** | **Notes** |
| **WAS Sludge Production** | 414 lbs sludge / day | |
| **Chemical Sludge Production** | 54 lbs sludge / day | Based on Chem-P process |
| **Total Sludge Production** | 468 lbs sludge / day | |
| **Sludge Concentration** | 1.00% | |
| **Sludge Flow** | 5,610 gal sludge / day | |
| **WAS Volatile Fraction** | 75% | Assumed |

| System Design Parameters | | |
|---|---|---|
| **Parameter** | **Value** | **Notes** |
| **Plant HRT** | 10.2 hrs | |
| **Design Plant SRT** | 22 days | |
| **F:M ratio** | 0.06 | |

| FEED FORWARD Pump Design | | |
|---|---|---|
| **Parameter** | **Value** | **Notes** |
| **FEED FORWARD Pumps** | 2 | 1 Duty, 1 Stdby |
| **Type** | SUBMERSIBLE | |
| **Unit Capacity** | 1,151 GPM | |
| **TDH** | 10.0 ft | |

Enviroquip
a division of Eimco Water Technologies

# Design Summary

**Yacolt WWTP (MMF 0.29 MGD)**

| Permeate Pump Design | | |
|---|---|---|
| **Parameter** | **Value** | **Notes** |
| **Permeate Pumps** | 3 | 2 Duty, 1 Stdby |
| **Type** | CENTRIFUGAL | Pump-Assisted Gravity Design |
| **Permeate Capacity @ MMF** | 224 GPM | Flow = 0.29 MGD (Capacity Includes Relax) |
| **Permeate Capacity @ PDF** | 448 GPM | Flow = 0.58 MGD * (Capacity Includes Relax) |
| **Max Permeate Capacity** | 559 GPM | Flow = 0.73 MGD (Capacity Includes Relax) |
| **TDH** | 25.0 ft | |

| Blower Design | | |
|---|---|---|
| **Parameter** | **Value** | **Notes** |
| **MBR Blowers** | 3 | 2 duty, 1 Stdby |
| **Type** | POSITIVE DISPLACEMENT | |
| **Unit MBR Blower Capacity** | 396 SCFM | |
| **MBR Blower Discharge Pressure** | 5.07 PSIG discharge | |
| **Pre-Aeration (PA) Blowers** | 2 | 1 duty, 1 Stdby |
| **Type** | POSITIVE DISPLACEMENT | |
| **Unit PA Blower Capacity** | 268 SCFM | |
| **PA Blower Discharge Pressure** | 6.22 PSIG discharge | |

| Chemical Cleaning Design | | |
|---|---|---|
| **Parameter** | **Value** | **Notes** |
| **Cleaning chemical (organic fouling)** | Sodium Hypochlorite | 2 times/yr |
| **Typical Cleaning Schedule** | 1-2 | cleanings/basin/yr |
| **Volume per Membrane** | 1.35 gal/cartridge | |
| **Volume of Cleaning Solution** | 1,350.00 gal/basin | |
| **Cleaning Solution Concentration** | 0.3% | |
| **Volume of 12.5% Stock solution** | 27 gal/basin/cleaning | |
| **Cleaning chemical (inorganic fouling)** | Oxalic Acid | 2 times/yr |
| **Typical Cleaning Schedule** | 1-2 | cleanings/basin/yr |
| **Volume per Membrane** | 1.35 gal/cartridge | |
| **Volume of Cleaning Solution** | 1,350.00 gal/basin | |
| **Cleaning Solution Concentration** | 1.0% | |
| **Volume of 100.0% Stock solution** | 14 gal/basin/cleaning | |

Enviroquip
a division of Eimco Water Technologies

**Scope of Supply**
**Yacolt WWTP (MMF 0.29 MGD)**

| | HEADWORKS GENERAL EQUIPMENT INFORMATION | | | | | MECHANICAL | | | | | |
|---|---|---|---|---|---|---|---|---|---|---|---|
| QTY | Function | Name | Type | Size or Unit Capacity | Value | Material | Rating | Manufacturer | Model or Specification | Motor HP | QTY |
| 2 | SCREENING | FINE SCREEN | BAR SCREEN | 700 | gpm | SS bars and rakes | N/A | ENVIROQUIP | FM-1400 | 0.25 | 2 |
| 1 | INFLUENT FLOW MEASUREMENT | FLOW METER | ELECTROMAGNETIC | 6.0 | Inch | POLYURETHANE | N/A | ENDRESS & HAUSER | PROMAG 10W1F-ULGA1RA0B4AA | N/A | 1 |
| 1 | PLANT WATER ISOLATION | AUTOMATED VALVE | SOLENOID (WITH CWC) | 1.0 | Inch | N/A | N/A | N/A | N/A | N/A | 1 |
| 1 | PLANT WATER ISOLATION | VALVE | BALL | 2.0 | Inch | PVC | N/A | ASAHI | 1601-020 | N/A | 1 |
| 1 | SOLIDS HANDLING | CONVEYOR WASHER COMPACTOR | SCREW | 700 | gpm | N/A | N/A | ENVIROQUIP | N/A | N/A | 1 |
| 3 | LEVEL MEASUREMENT | LEVEL SWITCH | FLOAT | N/A | N/A | POLYURETHANE | N/A | CONERY | 2900B1S1 | N/A | 3 |
| | ANOXIC ZONE GENERAL EQUIPMENT INFORMATION | | | | | MECHANICAL | | | | | |
| QTY | Function | Name | Type | Size or Unit Capacity | Value | Material | Rating | Manufacturer | Model or Specification | Motor HP | QTY |
| 1 | BASIN MIXING | MIXER | SUBMERSIBLE | 37,744 | gallons | STAINLESS STEEL | N/A | ABS | RW4022A35/8 | 4.70 | 1 |
| 1 | MIXER SUPPORT | MIXER SUPPORT HARDWARE & GUIDE RAIL | RAIL MOUNT | SS | N/A | N/A | N/A | N/A | N/A | N/A | 1 |
| 1 | LEVEL MEASUREMENT | LEVEL TRANSMITTER | HYDROSTATIC | 23 | feet | SS | N/A | BLUE RIBBON | BC001-10-40 | N/A | 1 |
| 2 | LEVEL MEASUREMENT | LEVEL SWITCH | FLOAT | N/A | N/A | POLYURETHANE | N/A | CONERY | N/A | N/A | 2 |
| | INTERNAL RECYCLE GENERAL EQUIPMENT INFORMATION | | | | | MECHANICAL | | | | | |
| QTY | Function | Name | Type | Size or Unit Capacity | Value | Material | Rating | Manufacturer | Model or Specification | Motor HP | QTY |
| 2 | FEED FORWARD | PUMP | SUBMERSIBLE | 1,151 | gpm | CAST IRON | N/A | ABS | XFP 201J CB2 PE210/6 | 15.00 | 2 |
| 2 | PUMP ISOLATION | VALVE | PLUG | 8.0 | Inch | CAST IRON | N/A | PRATT | PBPV-080 | N/A | 2 |
| 2 | FLOW DIRECTION | VALVE | SWING CHECK | 8.0 | Inch | CAST IRON | N/A | KEYSTONE | 810-080 | N/A | 2 |
| 1 | FEED FORWARD FLOW METER | FLOW METER | ELECTROMAGNETIC | 8.0 | Inch | POLYURETHANE | N/A | ENDRESS & HAUSER | PROMAG 10W2H-ULGA1RA0B4AA | N/A | 1 |
| | PRE-AERATION ZONE GENERAL EQUIPMENT INFORMATION | | | | | MECHANICAL | | | | | |
| QTY | Function | Name | Type | Size or Unit Capacity | Value | Material | Rating | Manufacturer | Model or Specification | Motor HP | QTY |
| 1 | BASIN MIXING | MIXER | SUBMERSIBLE | 56,709 | gallons | STAINLESS STEEL | N/A | ABS | RW4024A46/8 | 6.20 | 1 |
| 1 | MIXER SUPPORT | MIXER SUPPORT HARDWARE & GUIDE RAIL | RAIL MOUNT | SS | N/A | N/A | N/A | N/A | N/A | N/A | 1 |
| 1 | AERATION | DIFFUSER | FINE BUBBLE | 268 | SCFM / basin | N/A | N/A | EDI | N/A | N/A | 1 |
| 1 | DISSOLVED OXYGEN MEASURMENT | DO PROBE | LDO | 0-10 | mg/L DO | SS | N/A | HACH | 57900-00 | N/A | 1 |
| 1 | DO TRANSMITTER | ANALOG TRANSMITTER | SC100 | N/A | N/A | N/A | N/A | HACH | LXV401.52.00002 | N/A | 1 |

© ENVIROQUIP® 2010

Enviroquip
a division of Eimco Water Technologies

**Scope of Supply**
**Yacolt WWTP (MMF 0.29 MGD)**

| | MBR ZONE GENERAL EQUIPMENT INFORMATION | | | MECHANICAL | | | | | | | |
|---|---|---|---|---|---|---|---|---|---|---|---|
| QTY | Function | Name | Type | Size or Unit Capacity | Value | Material | Rating | Manufacturer | Model or Specification | Motor HP | QTY |
| 10 | MEMBRANE FILTRATION | SUBMERGED MEMBRANE UNIT | FLAT PLATE | N/A | N/A | SS304 | N/A | KUBOTA | RM-200 | N/A | 10 |
| 10 | VIBRATION ISOLATION | DIFFUSER EXPANSION JOINT | BULB | 3.0 | Inch | SYNTHETIC RUBBER / SS | N/A | API | AMS203 | N/A | 10 |
| 10 | DIFFUSER INLET ISOLATION | VALVE | BUTTERFLY | 3.0 | Inch | CAST IRON | N/A | KEYSTONE | 221-030 | N/A | 10 |
| 10 | DIFFUSER OUTLET ISOLATION | VALVE | BUTTERFLY | 2.5 | Inch | CAST IRON | N/A | KEYSTONE | 221-025 | N/A | 10 |
| 10 | PERMEATE BRANCH ISOLATION | VALVE | BALL | 3.0 | Inch | PVC | N/A | ASAHI | 1602-030 | N/A | 10 |
| 4 | LEVEL MEASUREMENT | LEVEL SWITCH | FLOAT | N/A | N/A | POLYURETHANE | N/A | CONERY | N/A | N/A | 4 |
| 2 | DIFFUSER CLEANING | AUTOMATED VALVE | 2 POSITION PLUG | 6.0 | Inch | CAST IRON | N/A | PRATT / BETTIS | PBPV-060 / EM830-18-C4-02-001 | N/A | 2 |
| 3 | CHEMICAL CLEANING ISOLATION | VALVE | BALL | 2.0 | Inch | PVC | N/A | ASAHI | 1601-020 | N/A | 3 |
| 2 | SLUDGE RETURN | TELESCOPING VALVE | SLIP TUBE+ Hand Wheel ASSY | 10.0 | Inch | SS | N/A | ENVIROQUIP | TV-ST-10 | N/A | 2 |
| 2 | PERMEATE HEADER ISOLATION | VALVE | BUTTERFLY | 6.0 | Inch | PVC | N/A | ASAHI | 3730-060 | N/A | 2 |
| 10 | FABRICATION | FASTENERS | N/A | N/A | N/A | N/A | N/A | ENVIROQUIP | N/A | N/A | 10 |
| 10 | FABRICATION | STRUCTURAL GUIDES & STABILIZER PIPES | N/A | N/A | N/A | N/A | N/A | ENVIROQUIP | N/A | N/A | 10 |
| 10 | FABRICATION | IN-BASIN PIPING & SUPPORTS | N/A | N/A | N/A | SS | N/A | ENVIROQUIP | N/A | N/A | 10 |
| 10 | FABRICATION | IN-BASIN PIPING & SUPPORTS | N/A | N/A | N/A | PVC | N/A | ENVIROQUIP | N/A | N/A | 10 |
| | PERMEATE CONTROL GENERAL EQUIPMENT INFORMATION | | | MECHANICAL | | | | | | | |
| QTY | Function | Name | Type | Size or Unit Capacity | Value | Material | Rating | Manufacturer | Model or Specification | Motor HP | QTY |
| 2 | TMP MEASUREMENT | PRESSURE TRANSMITTER | DIAPHRAGM | -15-+15 | PSI | N/A | N/A | ENDRESS & HAUSER | CERABAR T PMC 131-A22F1V6N/Q4H | N/A | 2 |
| 3 | PERMEATE PUMP | PUMP | CENTRIFUGAL | 280 | gpm | GRAY IRON | N/A | GORMAN RUPP | 13A20-B 3HP | 3.00 | 3 |
| 6 | VIBRATION ISOLATION | EXPANSION JOINT | BULB | 4.0 | Inch | SYNTHETIC RUBBER / SS | N/A | API | AMS204 | N/A | 6 |
| 6 | PUMP ISOLATION | VALVE | BALL | 4.0 | Inch | PVC | N/A | ASAHI | 1602-040 | N/A | 6 |
| 3 | VENT | VALVE | SOLENOID | 1.0 | Inch | -- | N/A | -- | -- | N/A | 3 |
| 3 | PUMP INLET PRESSURE | GAUGE | COMPOUND | -30-+15 | Inch Hg/PSI | SS | N/A | MCDANIEL | MPB/SCA-GF | N/A | 3 |
| 3 | PUMP OUTLET PRESSURE | GAUGE | PRESSURE | 0-15 | PSI | SS | N/A | MCDANIEL | MPB/SCU-GF | N/A | 3 |
| 3 | FLOW DIRECTION (PUMPED) | VALVE | BALL CHECK | 4.0 | Inch | PVC | N/A | ASAHI | 1210-040 | N/A | 3 |
| 3 | FLOW DIRECTION (GRAVITY) | VALVE | BALL CHECK | 4.0 | Inch | PVC | N/A | ASAHI | 1210-040 | N/A | 3 |
| 1 | ON/OFF | VALVE | NEEDLE | 0.25 | Inch | POLYPROPYLENE | N/A | ASAHI | 5313.002 | N/A | 1 |
| 2 | FLOW MEASUREMENT | FLOW METER | ELECTROMAGNETIC | 4.0 | Inch | POLYURETHANE | N/A | ENDRESS & HAUSER | PROMAG 10W1H-ULGA1RA0B4AA | N/A | 2 |
| 2 | FLOW CONTROL | AUTOMATED VALVE | MODULATING BALL | 4.0 | Inch | PVC | N/A | ASAHI / BETTIS | 1601-040 / EM500F-15-C4-02-102 | N/A | 2 |
| 1 | TURBIDITY MEASUREMENT | TURBIDITY METER | OPTICAL | 0-100 | NTU | N/A | N/A | HACH | 60101-01 | N/A | 1 |
| 1 | TURBIDITY / PH TRANSMITTER | ANALOG TRANSMITTER | SC100 | N/A | N/A | N/A | N/A | HACH | LXV401.52.00002 | N/A | 1 |

Enviroquip
a division of Eimco Water Technologies

**Scope of Supply**
**Yacolt WWTP (MMF 0.29 MGD)**

| | MBR AERATION GENERAL EQUIPMENT INFORMATION | | | MECHANICAL | | | | | | | |
|---|---|---|---|---|---|---|---|---|---|---|---|
| QTY | Function | Name | Type | Size or Unit Capacity | Value | Material | Rating | Manufacturer | Model or Specification | Motor HP | QTY |
| 3 | MBR BLOWER | BLOWER | POSITIVE DISPLACEMENT | 396 | SCFM | CAST IRON | N/A | KAESER | DB165C-20HP | 20.00 | 3 |
| 3 | MBR NOISE SUPPRESSION | SOUND ENCLOSURE | WITH BLOWER | N/A | N/A | N/A | N/A | KAESER | N/A | N/A | 3 |
| 3 | MBR BLOWER TEMP | TEMPERATURE GAUGE | WITH BLOWER | N/A | N/A | N/A | N/A | KAESER | N/A | N/A | 3 |
| 3 | MBR BLOWER PRESSURE | PRESSURE GAUGE | WITH BLOWER | N/A | N/A | N/A | N/A | KAESER | N/A | N/A | 3 |
| 3 | MBR BLOWER TEMP SWITCH | TEMPERATURE SWITCH | WITH BLOWER | N/A | N/A | N/A | N/A | KAESER | N/A | N/A | 3 |
| 3 | MBR BLOWER FLOW CONTROL | VALVE | CHECK (WITH BLOWER) | N/A | N/A | N/A | N/A | KAESER | N/A | N/A | 3 |
| 3 | MBR BLOWER PRESSURE RELIEF | VALVE | PRESSURE RELIEF (WITH BLOWER) | N/A | N/A | N/A | N/A | KAESER | N/A | N/A | 3 |
| 3 | MBR BLOWER PRESSURE | PRESSURE TRANSMITTER | DIAPHRAGM | -15-+15 | PSI | N/A | N/A | ENDRESS & HAUSER | CERABAR T PMC 131-A22F1V6N/Q4H | N/A | 3 |
| 5 | MBR AIR ISOLATION | VALVE | BUTTERFLY | 6.0 | Inch | CAST IRON | N/A | KEYSTONE | 221-060 | N/A | 5 |
| 2 | MBR AIR FLOW MEASUREMENT | FLOW METER | MASS AIR FLOW | 8.0 | Inch | SS | N/A | ENDRESS & HAUSER | 65I-80AA0AD1ACBBBA | N/A | 2 |
| | PA AIR SUPPLY GENERAL EQUIPMENT INFORMATION | | | MECHANICAL | | | | | | | |
| QTY | Function | Name | Type | Size or Unit Capacity | Value | Material | Rating | Manufacturer | Model or Specification | Motor HP | QTY |
| 2 | PA BLOWER | BLOWER | POSITIVE DISPLACEMENT | 268 | SCFM | CAST IRON | N/A | KAESER | DB130C-15HP | 15.00 | 2 |
| 2 | PA NOISE SUPPRESSION | SOUND ENCLOSURE | WITH BLOWER | N/A | N/A | N/A | N/A | KAESER | N/A | N/A | 2 |
| 2 | PA BLOWER TEMP | TEMPERATURE GAUGE | WITH BLOWER | N/A | N/A | N/A | N/A | KAESER | N/A | N/A | 2 |
| 2 | PA BLOWER PRESSURE | PRESSURE GAUGE | WITH BLOWER | N/A | N/A | N/A | N/A | KAESER | N/A | N/A | 2 |
| 2 | PA BLOWER TEMP SWITCH | TEMPERATURE SWITCH | WITH BLOWER | N/A | N/A | N/A | N/A | KAESER | N/A | N/A | 2 |
| 2 | PA BLOWER FLOW CONTROL | VALVE | CHECK (WITH BLOWER) | N/A | N/A | N/A | N/A | KAESER | N/A | N/A | 2 |
| 2 | PA BLOWER PRESSURE RELIEF | VALVE | PRESSURE RELIEF (WITH BLOWER) | N/A | N/A | N/A | N/A | KAESER | N/A | N/A | 2 |
| 2 | PA BLOWER PRESSURE | PRESSURE TRANSMITTER | DIAPHRAGM | -15-+15 | PSI | N/A | N/A | ENDRESS & HAUSER | CERABAR T PMC 131-A22F1V6N/Q4H | N/A | 2 |
| 2 | PA AIR ISOLATION | VALVE | BUTTERFLY | 6.0 | Inch | CAST IRON | N/A | KEYSTONE | 221-060 | N/A | 2 |
| | COAGULANT DOSING GENERAL EQUIPMENT INFORMATION | | | MECHANICAL | | | | | | | |
| QTY | Function | Name | Type | Size or Unit Capacity | Value | Material | Rating | Manufacturer | Model or Specification | Motor HP | QTY |
| 2 | Alum METERING PUMP | PUMP | DIAPHRAGM | 47 | gpd | PVDF | N/A | LMI | AA | N/A | 2 |

Enviroquip
a division of Eimco Water Technologies

**Scope of Supply**
**Yacolt WWTP (MMF 0.29 MGD)**

| | SMU CIP GENERAL EQUIPMENT INFORMATION | | | MECHANICAL | | | | | | | |
|---|---|---|---|---|---|---|---|---|---|---|---|
| QTY | Function | Name | Type | Size or Unit Capacity | Value | Material | Rating | Manufacturer | Model or Specification | Motor HP | QTY |
| 1 | MAZZIE INJECTOR | INJECTOR | VENTURI | 2.0 | Inch | POLYPROPYLENE | N/A | MAZZEI INJECTOR CORP | 2081 | N/A | 1 |
| 1 | WATER SUPPLY VALVE | AUTOMATED VALVE | 2 POSITION BALL | 2.0 | Inch | PVC | N/A | ASAHI / BETTIS | 1601-020 / EM310F-10-C4-02-102 | N/A | 1 |
| 2 | CIP THROTTLING | VALVE | BALL | 2.0 | Inch | PVC | N/A | N/A | N/A | N/A | 2 |
| 2 | INJECTOR PRESSURE | GAUGE | PRESSURE | 0-15 | PSI | SS | N/A | MCDANIEL | MPB/SCU-GF | N/A | 2 |
| 1 | DRAIN | VALVE | BALL CHECK | 1.0 | Inch | PVC | N/A | ASAHI | 1210-010 | N/A | 1 |
| 1 | CHEMICAL ISOLATION | VALVE | BALL | 2.0 | Inch | PVC | N/A | ASAHI | 1601-020 | N/A | 1 |
| 1 | PRESSURE CONTROL | VALVE | PRESSURE REGULATOR VALVE | 2.0 | Inch | N/A | N/A | WILKINS | 600/DUC | N/A | 1 |
| 1 | CHEMICAL FLOW | FLOW METER | ROTOMETER | 2.7 | gpm | POLYSULPHONE | N/A | KOBOLD | KSM-4020 | N/A | 1 |
| 1 | FLOW MEASUREMENT | FLOW METER | ELECTROMAGNETIC | 2.0 | Inch | POLYURETHANE | N/A | ENDRESS & HAUSER | PROMAG 10W50-ULGA1RA0B4AA | N/A | 1 |
| 1 | INJECTOR ASSEMBLY | PIPE SPOOL | SUCTION | N/A | N/A | N/A | N/A | ENVIROQUIP | N/A | N/A | 1 |
| 1 | CHEMICAL TRANSFER TO MBR | HOSE | SUCTION | 1.0 | Inch | PVC | N/A | TIGERFLEX | W100 | N/A | 1 |

| | CONTROLS GENERAL EQUIPMENT INFORMATION | | | MECHANICAL | | | | | | | |
|---|---|---|---|---|---|---|---|---|---|---|---|
| QTY | Function | Name | Type | Size or Unit Capacity | Value | Material | Rating | Manufacturer | Model or Specification | Motor HP | QTY |
| 1 | PLANT CONTROL | SCADA | SOFTWARE | N/A | N/A | N/A | N/A | WONDERWARE | N/A | N/A | 1 |
| 1 | PLANT CONTROL | HMI | PANEL MOUNT PC | N/A | N/A | N/A | N/A | N/A | N/A | N/A | 1 |
| 1 | PLANT CONTROL | PLC PANEL | N/A | N/A | N/A | N/A | N/A | N/A | N/A | N/A | 1 |

| | MISCELLANEOUS GENERAL EQUIPMENT INFORMATION | | | MECHANICAL | | | | | | | |
|---|---|---|---|---|---|---|---|---|---|---|---|
| QTY | Function | Name | Type | Size or Unit Capacity | Value | Material | Rating | Manufacturer | Model or Specification | Motor HP | QTY |
| 5 | PROJECT KICKOFF MEETING | N/A | N/A | N/A | N/A | N/A | N/A | N/A | N/A | N/A | 5 |
| 5 | MECHANICAL INSPECTION | N/A | N/A | N/A | N/A | N/A | N/A | N/A | N/A | N/A | 5 |
| 5 | START-UP / COMMISSIONING | N/A | N/A | N/A | N/A | N/A | N/A | N/A | N/A | N/A | 5 |
| 5 | TRAINING | N/A | N/A | N/A | N/A | N/A | N/A | N/A | N/A | N/A | 5 |
| 5 | OPERATION & MAINTENANCE MANUALS | N/A | N/A | N/A | N/A | N/A | N/A | N/A | N/A | N/A | 5 |
| 1 | SMU FREIGHT | N/A | N/A | N/A | N/A | N/A | N/A | N/A | N/A | N/A | 1 |
| 1 | EQUIPMENT FREIGHT | N/A | N/A | N/A | N/A | N/A | N/A | N/A | N/A | N/A | 1 |

© ENVIROQUIP® 2010

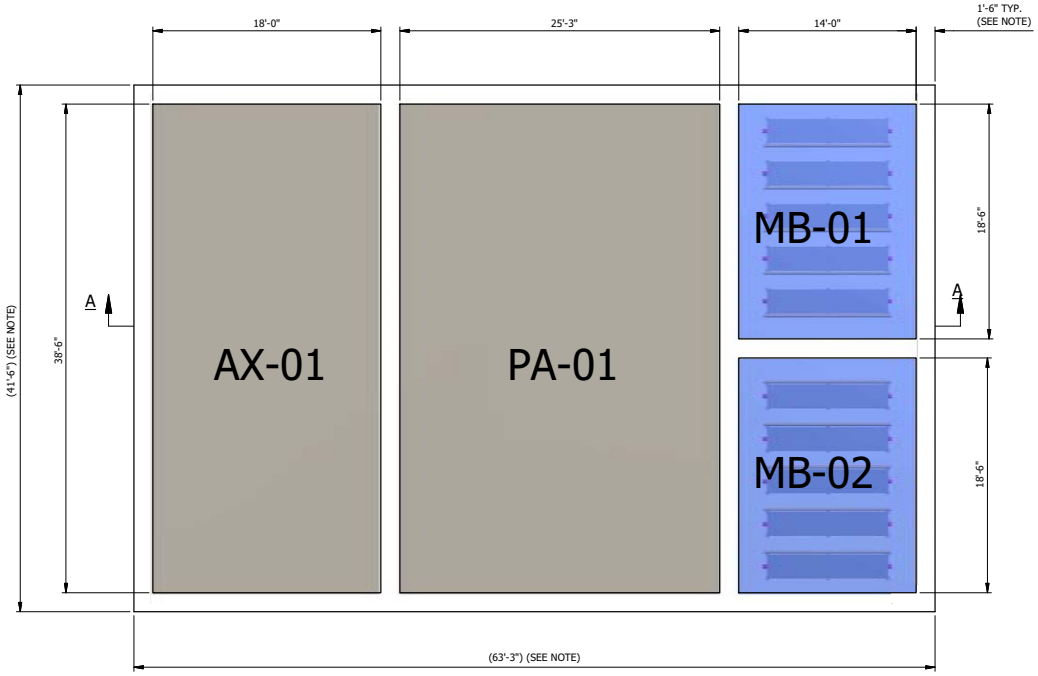


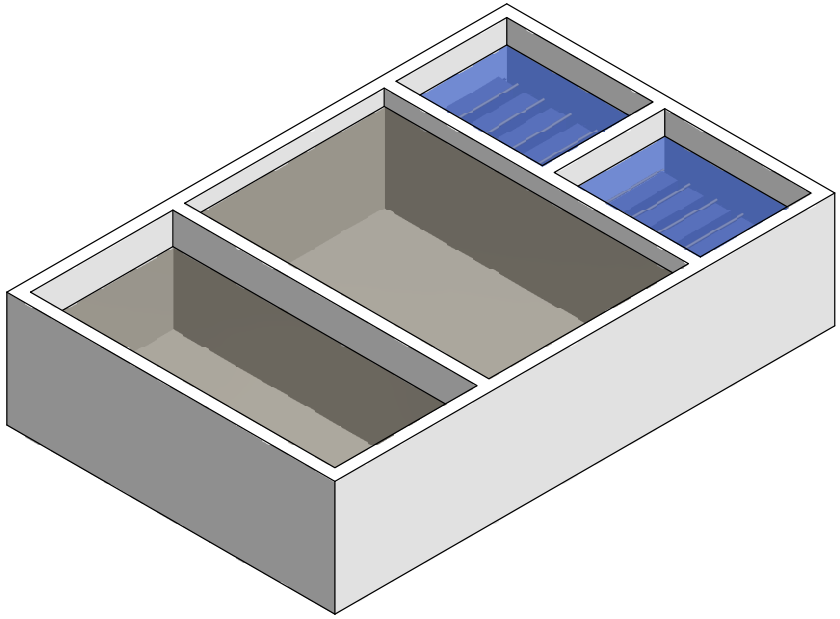

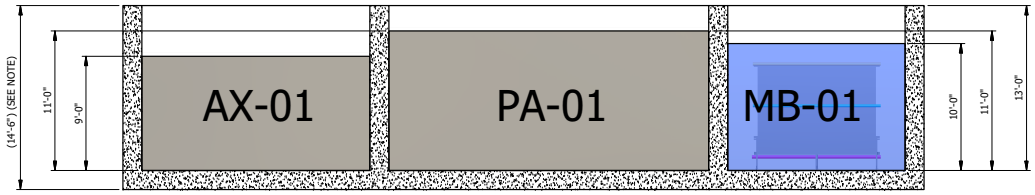


SECTION A-A

NOTE:

1. DIMENSION IS BASED ON WALL AND FLOOR THICKNESSES OF 1'-6" AND IS FOR REFERENCE ONLY. ACTUAL DIMENSION OF WALLS AND FLOORS ARE THE RESPONSIBILITY OF THE ENGINEER AND NO ACCURACY OR RESPONSIBILITY FOR THE REFERENCE DIMENSIONS ARE TO BE INFERRED OR IMPLIED FROM THIS DRAWING.

| REVISION DESCRIPTION | EN/ECO | BY | CHECK'D | DATE | REV |
|---|---|---|---|---|---|
| INITIAL RELEASE | - | - | - | - | A |

**Enviroquip** a division of Eimco Water Technologies — A GLV COMPANY — D

COPYRIGHT © 2006 BY GLAV
ALL RIGHTS RESERVED - REV D

THIS DRAWING CONTAINS CONFIDENTIAL PROPRIETARY INFORMATION OF EIMCO WATER TECHNOLOGIES AND IS NOT TO BE DISCLOSED NOR TO BE USED EXCEPT FOR EVALUATING PROPOSALS OF EIMCO WATER TECHNOLOGIES OR INSTALLING, OPERATING OR MAINTAINING EIMCO WATER TECHNOLOGIES EQUIPMENT, UNLESS OTHERWISE AUTHORIZED IN WRITING BY EIMCO WATER TECHNOLOGIES.

WORKMANSHIP STANDARD
ESSEN APPLIES

ORIGINAL S.O.

DATE 9/22/2010
DRAWN DEG
CHECK'D CR

**YACOLT WA.**
**WWTP, (MMF 0.29 MGD)**
**BASIN LAYOUT**

DO NOT SCALE PRINTS
REF. FROM
SHEET 1 OF 1
DWG. NO. YACOWAUS P101
REV A

## Priya Dhanapal

**From:** Strasser, David [dstrasser@trane.com]
**Sent:** Friday, January 14, 2011 1:04 PM
**To:** Edward Burnacci
**Subject:** RE: Effluent Cooling - CH Sub Ver 1

Ed,

Yes this will get us there. I used 72-55 as the selection criteria for the chiller, that way you have 5 degree offset in your heat exchanger. See page 4 of the submittal for selection data.

Thanks,

David

---

**From:** Edward Burnacci [mailto:EdwardBurnacci@KennedyJenks.com]
**Sent:** Friday, January 14, 2011 12:16 PM
**To:** Strasser, David
**Subject:** RE: Effluent Cooling - CH Sub Ver 1

David,
I didn't notice any design parameters mentioned in the initial chiller sizing that you sent me (RTWD Series R(TM) 70-250 Ton Water-Cooled), so can you please confirm that this chiller will be able to bring the effluent water temperature from 77 degrees F(25 deg C) to 60 degrees F (16 deg C) at a flow rate of 190 gpm (.27 MGD).

Thanks,
Ed

---

**From:** Strasser, David [mailto:dstrasser@trane.com]
**Sent:** Monday, January 10, 2011 3:24 PM
**To:** Edward Burnacci
**Subject:** Effluent Cooling - CH Sub Ver 1

Edward,

Attached is a submittal with budget pricing. We can put together a more accurate cost estimate with 3-5 days lead time. This is very rough based on typical job costs for the estimate of the packaged plant.

Note that the packaged plant would include a water cooled chiller, cooling tower, tower and chiller pumps, over-sized shell and tube heat exchanger, all piping, controls, and an encolusre for the chiller and pumps which are all indoor rated. This is a great packaged solution but it is custom designed so we do need some time to put it together.

Let me know if we should move ahead on the packaged plant.

The information contained in this message is privileged and intended only for the recipients named. If the reader is not a representative of the intended recipient, any review, dissemination or copying of this message or the information it contains is prohibited. If you have received this message in error, please immediately notify the sender, and delete the original message and attachments.

The information contained in this message is privileged and intended only for the recipients named. If the reader is not a representative of the intended recipient, any review, dissemination or copying of this message or the information it contains is prohibited. If you have received this message in error, please immediately notify the sender, and delete the original message and attachments.

# Submittal

***Prepared For:***
*Edward Burnacci*
*Kennedy Jenks*

***Date:*** *January 10, 2011*

***Customer P.O. Number:***
***Customer Project Number:***

***Job Number:***
***Job Name:***
*Kennedy Jenks - WWT Chiller*

---

Trane U.S. Inc. is pleased to provide the enclosed submittal for your review and approval.

**Product Summary**

| Qty | Product |
|---|---|
| 1 | Water Cooled Helical Rotary Chillers (Duplex) |

---

*The attached information describes the equipment we propose to furnish for this project, and is submitted for your approval.*

**David Strasser**
Trane
7257 SW Kable Lane
Portland, OR 97224-7181
Phone: (503) 620-8031
Fax: (503) 639-1454

1. Budget cost of the chiller alone: $ 53,000 (includes start-up and first year labor).
2. Budget cost for a **packaged plant including: chiller, tower, over-sized shell and tube heat exchanger, controls, pumps, mounting and piping of all components, enclosure to cover indoor components. $ 2,200 to $ 2,600/ton** is a very rough estimate. Packaged plant would come fully assembled with a single electrical connection and a single piping connection required.

## Table Of Contents

**Product Summary** ..... **1**

**Water Cooled Helical Rotary Chillers (Duplex) (Item A1)**

Tag Data ..... 3
Product Data ..... 3
Performance Data ..... 4
Mechanical Specifications ..... 5
Unit Dimensions ..... 8
Weight, Clearance & Rigging Diagram ..... 14
Accessory ..... 16
Field Wiring ..... 19

**Tag Data - Water Cooled Helical Rotary Chillers (Duplex) (Qty: 1)**

| Item | Tag(s) | Qty | Description | Model Number |
|---|---|---|---|---|
| A1 | RTWD-1 | 1 | RTWD Series R(TM) 70-250 Ton Water-Cooled | RTWD120F2A01A1A1AA2A1A1X1A0A000000000 00000010000000000002000 |

**Product Data - Water Cooled Helical Rotary Chillers (Duplex)**

**Item: A1 Qty: 1 Tag(s): RTWD-1**

RTWD - water cooled chiller Series R
60 hertz
460 volt 3 phase
120 nominal tons
**Startup allowance**
Standard efficiency/performance
Standard Condenser < 95F/35C Leaving Water Temperature
UL listed to U.S.and Canadian safety std
ASHRAE 90.1 2007 compliant
AHRI certified
Single relief valve
Factory insulation - all cold parts
Grooved pipe connection
Full factory refrigerant charge (134a)
Shrink wrap
Internal & External Enhanced Evaporator Copper Tube
2 pass evaporator
150 psi/10 bar evap water pressure
Standard cooling
Fluid type = water
Enhanced fin - copper
150 psi/10 bar cond water pressure
Fluid type = water
Across the line starter
Single point power connection
Terminal block conn for incoming lines
1st year labor warr whole unit
ASME pressure vessel code

**Performance Data - Water Cooled Helical Rotary Chillers (Duplex)**

| Tags | RTWD-1 |
|---|---|
| Cooling capacity (tons) | 154.40 |
| Unit power (kW) | 95.90 |
| Full load (kW/ton) | 0.621 |
| Efficiency (EER) | 19.3 |
| Non-Standard Part (kW/ton) | 0.461 |
| Integrated Part (kW/ton) | 0.551 |
| Full load sound pressure (dBA) | 81 |
| Refrigerant charge circuit 1 (lb) | 132.3 |
| Refrigerant charge circuit 2 (lb) | 132.3 |
| Oil charge circuit 1 (gal) | 2.60 |
| Oil charge circuit 2 (gal) | 2.60 |
| Evap leaving temp (F) | 55.00 |
| Evap entering temp (F) | 74.50 |
| Evap flow rate (gpm) | 190.00 |
| Evap pressure drop (ft H2O) | 8.80 |
| Evap fouling factor (hr-sq ft-deg F/Btu) | 0.00010 |
| Evap fluid concentration (%) | 0.00 |
| Evap fluid freeze point (F) | 32.00 |
| Minimum evap flow rate (gpm) | 101.00 |
| Pressure drop at min evap flow (ft H2O) | 2.60 |
| Max evap flow rate (gpm) | 368.00 |
| Pressure drop at max evap flow (ft H2O) | 28.50 |
| Saturated evaporator temp - ckt 1 (F) | 50.80 |
| Saturated evaporator temp - ckt 2 (F) | 48.30 |
| Cond entering temp (F) | 85.00 |
| Cond leaving temp (F) | 95.00 |
| Cond flow rate (gpm) | 430.30 |
| Cond fouling factor (hr-sq ft-deg F/Btu) | 0.00025 |
| Cond pressure drop (ft H2O) | 24.00 |
| Cond fluid concentration (%) | 0.00 |
| Min cond flow rate (gpm) | 135.00 |
| Pressure drop-min cond flow (ft H2O) | 2.40 |
| Max cond flow rate (gpm) | 491.00 |
| Pressure drop-max cond flow (ft H2O) | 31.00 |
| Saturated condensing temp - ckt 1 (F) | 103.30 |
| Saturated condensing temp - ckt 2 (F) | 104.50 |
| Compressor power (kW) | 95.50 |
| RLA - compressor A (A) | 62.00 |
| LRA - compressor A (A) | 471.00 |
| RLA - compressor B (A) | 73.00 |
| LRA - compressor B (A) | 600.00 |
| Single point power MCA (A) | 155.00 |
| Single point power MOP (A) | 225.00 |
| Short circuit rating - amps (A) | 10000.00 |
| Number of compressors (Number) | 2.00 |
| Number of circuits (Number) | 2.00 |
| Shipping weight (lb) | 6247.9 |
| Operating weight (lb) | 6530.1 |
| Length (in) | 138.787 |
| Width (in) | 35.041 |
| Height (in) | 76.933 |
| Water connections evaporator (in) | 5.000 |
| Water connections condenser (in) | 5.000 |

**Mechanical Specifications - Water Cooled Helical Rotary Chillers (Duplex)**
**Item: A1 Qty: 1 Tag(s): RTWD-1**

**General**
Exposed metal surfaces are painted with air-dry beige, direct-to-metal, single-component paint. Each unit ships with full operating charges of refrigerant and oil.

**Compressor and Oil Management**
The unit is equipped with two semi-hermetic, direct-drive, 3600 rpm, rotary compressors that include a load/unload valve, rolling element bearings, oil filtration device and heater. The motor is a suction gas-cooled, hermetically sealed, two-pole squirrel cage induction motor.

Oil separator device is provided separate from the compressor. Check valves are provided on the compressor discharge and lube oil system. A solenoid valve in the lube system is also provided.

The chiller is configured with an oil management system that ensures proper oil circulation throughout the unit. The key components of the system include an oil separator, oil filter and gas pump. All compressors are factory tested to confirm operation prior to shipment.

**Refrigerant Circuit**
Each unit has two refrigerant circuits, with one rotary screw compressor per circuit. Each refrigerant circuit includes compressor suction and discharge service valves, liquid line shut off valve, removable core filter, charging port and an electronic expansion valve. Modulating compressors and electronic expansion valves provide variable capacity modulation over the entire building load and maintain proper refrigerant flow.

**Agency Listing**
Chiller is C/UL Listed.

**Pressure Vessel Code**
Chiller complies with ASME Pressure Vessel Code. ASME nameplates are attached to applicable pressure vessels including oil separators.

**Unit Application**
Standard condenser allows for leaving condenser water temperatures up to 105.0 F and for entering condenser temperatures up to 95.0 F.

**Condenser**
Dual circuited, shell and tube condenser designed with seamless internally/externally finned tubes expanded into tubesheets and mechanically fastened to tube supports. All tubes can be individually replaced.

Shells and tube sheets are made of carbon steel. The condenser is designed for refrigerant-side/working-side pressure of 300.00 psi. Condenser is designed for 150.00 psi waterside working pressure. Waterside shall be hydrostatically tested at 225.00 psi.

Condenser tubes are 1" diameter.

Water side has single left-hand inlet and outlet piping connection.

**Evaporator Application**
Standard evaporator allows for minimum leaving water temperature of 40.0 F.

**Evaporator**
Dual circuited, shell and tube falling film evaporator design is used. Seamless internally finned, copper tubes are mechanically expanded into tube sheets and mechanically fastened to tube supports. All tubes can be individually replaced.

Shells and tube sheets are made of carbon steel. The evaporator is designed for refrigerant-side/working-side pressure of 200.00 psi. Evaporator is designed for 150.00 psi waterside working pressure. Waterside shall be hydrostatically tested at 225.00 psi.

Evaporator tubes are 1" diameter.

Water connections are on the left side of the unit when facing control panel. Water enters at the bottom connection and exits at the top connection.

**Connection Type**
Condenser and evaporator water boxes are cast with standard grooved pipe connections. Cast boxes should not be welded.

**Pressure Relief Valve**
Unit comes with a single relief valve.

**Unit Mounted Starter**
The enclosure has top power-wiring access and three-phase, overload protection. A factory-installed, factory-wired 820 VA control power transformer provides all unit control power (120 VAC secondary), Trane CH530 module power (24 VAC secondary), and water regulating valve power (110 VAC - field installed).

Starter is an across-the-line configuration, factory-mounted and fully pre-wired to the compressor motor and control panel.

The control cabinet is built per UL 1995.

**Power Connection**
Unit is provided with single point electrical power connection.

**Control Panel**
The microprocessor-based control panel is factory-installed and factory-tested. The control system is powered by a pre-wired control power transformer, and will load and unload the chiller through adjustment of the compressor slide valve. Microprocessor-based chilled water reset based on return water is standard.

The Trane CH530 utilizing the Adaptive Control (TM) microprocessor automatically unloads the compressor to prevent unit shutdown due to abnormal operating conditions associated with low evaporator refrigerant temperature, high condensing temperature, and/or motor current overload. If an abnormal operating condition continues and the protective limit is reached, the machine should shut down.

The panel includes machine protection shutdown requiring manual reset for the following conditions: low evaporator refrigerant temperature and pressure, high condenser refrigerant pressure, low oil flow, critical sensor or detection circuit faults, motor current overload, high compressor discharge temperature, lost communication between modules, electrical distribution faults: phase loss, phase imbalance, or phase reversal, external and local emergency stop, and starter transition failure.

The panel also includes machine protection shutdown with automatic reset for the following correctable conditions: momentary power loss, under/over voltage, and loss of evaporator or condenser water flow.

When a fault is detected, the control system conducts more than 100 diagnostic checks and will hold up to 60 diagnostics in memory. The display will identify the fault, indicate date, time, and operating mode at time of occurrence, and provide type of reset required and a help message. The historic diagnostic report will display the last 20 diagnostics with their times and dates of occurrence.

**Operator Interface**
Factory-mounted to the control panel door, the operator interface has an LCD touch-screen display for operator input and information output. This interface provides access to the following information: evaporator report, condenser report, compressor report, operator settings, service settings, service tests, and diagnostics. Some service settings and tests are accessed through the TechView service tool.

All diagnostics and messages are displayed in clear language.

Data contained in available reports includes: setpoints, water and air temperatures, refrigerant levels and temperatures, oil pressure, flow switch status, EXV position, head pressure control command, compressor starts and run-time, and line phase percent RLA, amps, and volts.

ASHRAE Guideline 3 report is available.

**Variable Evaporator Flow Compensation**

This feature varies the evaporator leaving water temperature control gains to provide stability of the evaporator leaving water temperature relative to setpoint. It uses the EXV position and pressure drop across the EXV as inputs to calculate the evaporator waterside temperature drop. The evaporator water flow rate can then be calculated from the temperature drop and can be used as an input to varying the leaving water temperature control gains. This new feature is available as standard.

**Insulation**

The evaporator, water boxes, and motor housing are covered with factory installed 3/4" Armaflex II or equal (k=0.28) insulation. Factory installed foam insulation is used on the suction line, liquid level sensor, oil return system assembly (with its associated piping). Lifting lugs, base plates and service valves will not include insulation.

**Shipment Packaging**

Unit is provided with shrink-wrapped opaque plastic, with UV protection and rust inhibitor around unit for shipment.

## Unit Dimensions - Water Cooled Helical Rotary Chillers (Duplex)
## Item: A1 Qty: 1 Tag(s): RTWD-1

| | | |
|---|---|---|
| Evaporator Water Connection Size | 5 In (125 mm) | NPS Pipe Size |
| Condenser Water Connection Size | 5 In (125 mm) | NPS Pipe Size |
| Evaporator Water Volume | 15 Gal/ 57 Liters | |
| Condenser Water Volume | 19 Gal/ 72 Liters | |

NOTES:
1. Dimensional Tolerance +/- 1/4" (6.35mm)
2. Evaporator and Condenser Entering Fluid Connection is the Bottom Connection, where applicable.
   Evaporator and Condenser Leaving Fluid Connection is the Top Connection, where applicable.

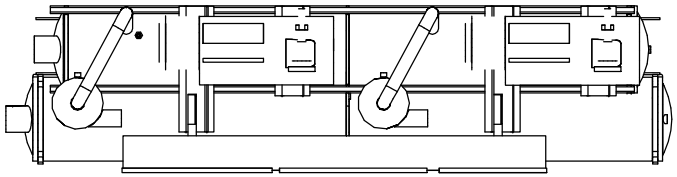

PLAN VIEW

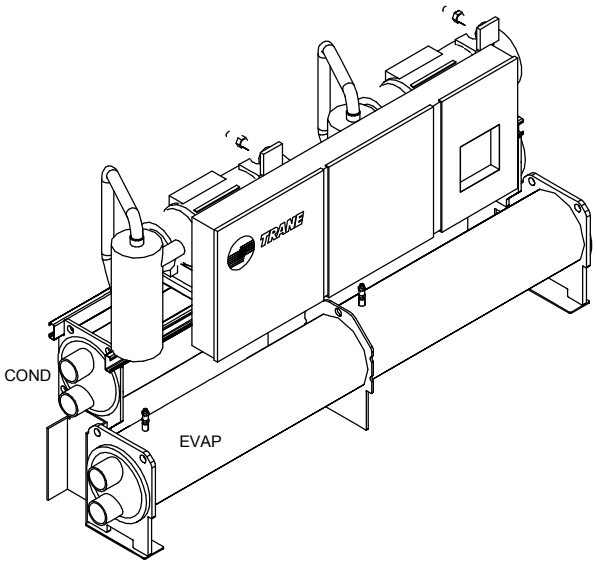


ISOMETRIC VIEW

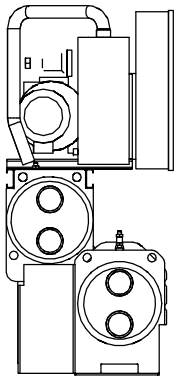

LEFT END VIEW

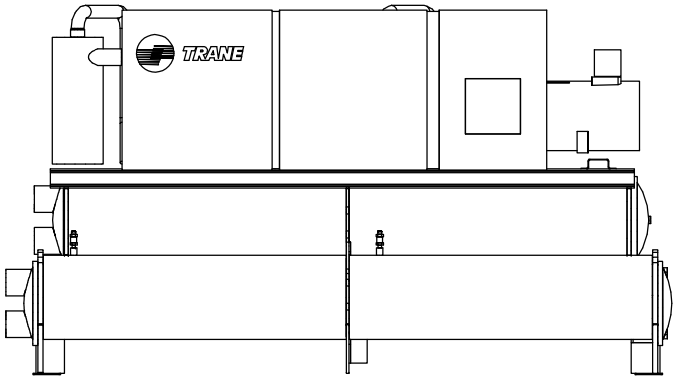

FRONT VIEW

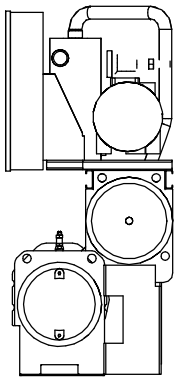

RIGHT END VIEW

| | | |
|---|---|---|
| Evaporator Water Connection Size | 5 In (125 mm) | NPS Pipe Size |
| Condenser Water Connection Size | 5 In (125 mm) | NPS Pipe Size |
| Evaporator Water Volume | 15 Gal/ 57 Liters | |
| Condenser Water Volume | 19 Gal/ 72 Liters | |

NOTES:
1. Dimensional Tolerance +/- 1/4" (6.35mm)
2. Evaporator and Condenser Entering Fluid Connection is the Bottom Connection, where applicable.
   Evaporator and Condenser Leaving Fluid Connection is the Top Connection, where applicable.

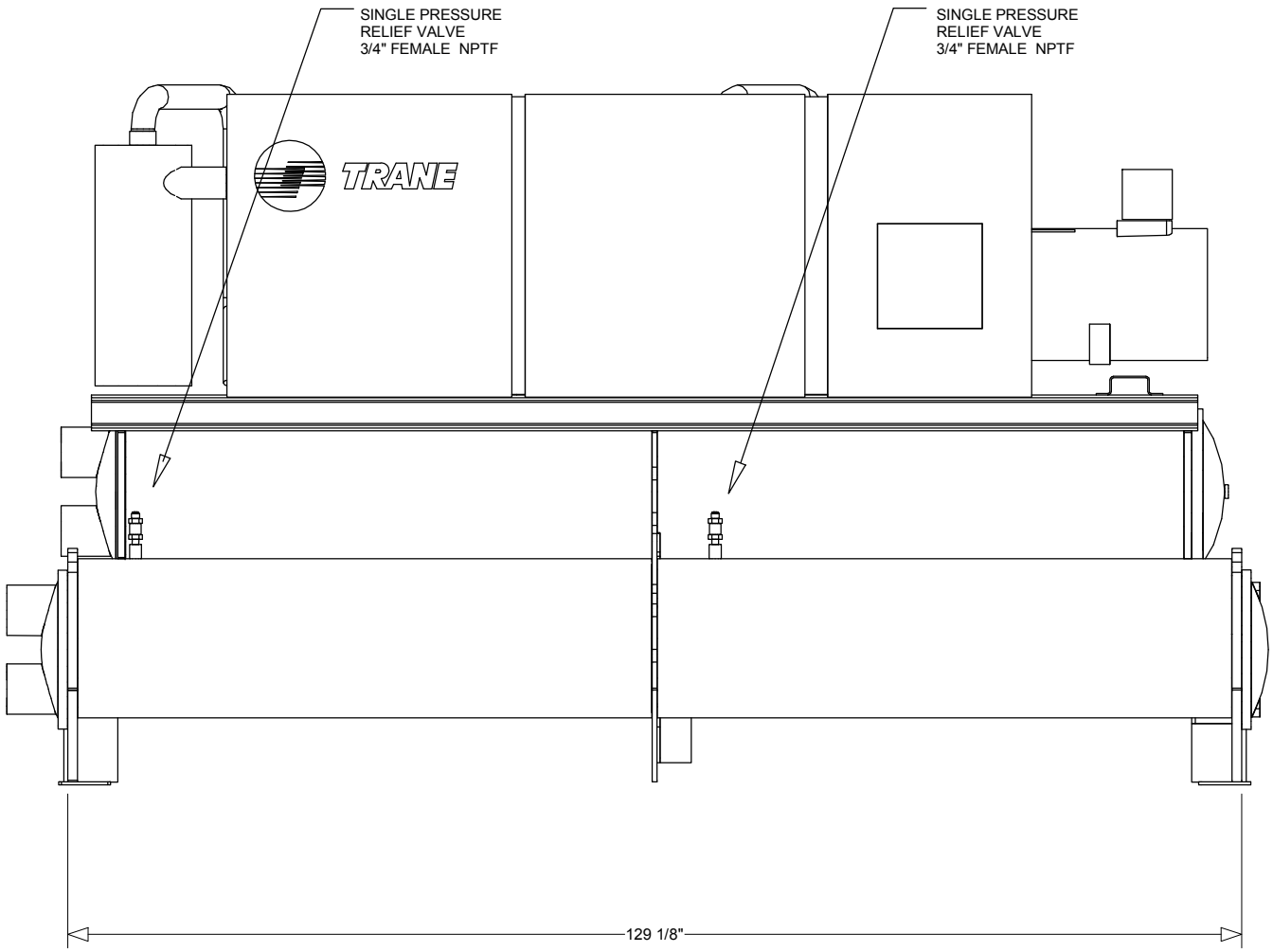


FRONT VIEW

| | | |
|---|---|---|
| Evaporator Water Connection Size | 5 In (125 mm) | NPS Pipe Size |
| Condenser Water Connection Size | 5 In (125 mm) | NPS Pipe Size |
| Evaporator Water Volume | 15 Gal/ 57 Liters | |
| Condenser Water Volume | 19 Gal/ 72 Liters | |

NOTES:
1. Dimensional Tolerance +/- 1/4" (6.35mm)
2. Evaporator and Condenser Entering Fluid Connection is the Bottom Connection, where applicable.
   Evaporator and Condenser Leaving Fluid Connection is the Top Connection, where applicable.

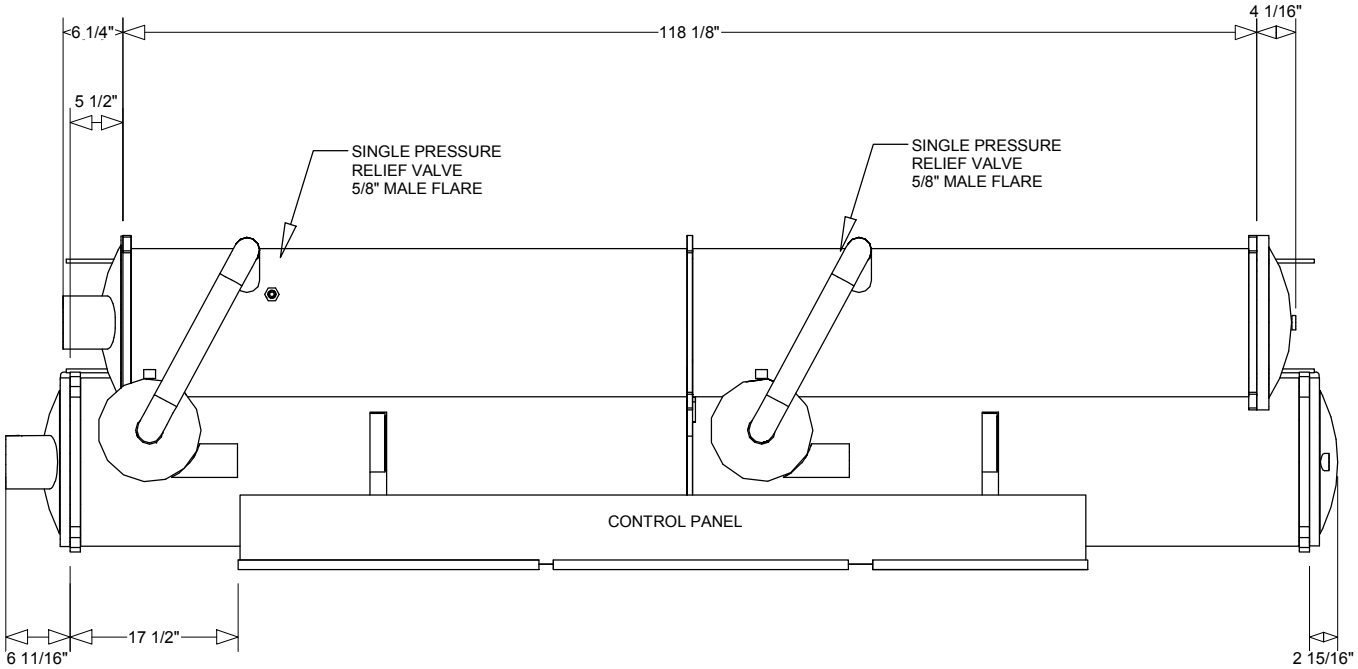


PLAN VIEW

COMPRESSORS AND SOUND BOXES WHEN
PRESENT REMOVED FOR CLARITY IN THIS VIEW

| | | |
|---|---|---|
| Evaporator Water Connection Size | 5 In (125 mm) | NPS Pipe Size |
| Condenser Water Connection Size | 5 In (125 mm) | NPS Pipe Size |
| Evaporator Water Volume | 15 Gal/ 57 Liters | |
| Condenser Water Volume | 19 Gal/ 72 Liters | |

NOTES:
1. Dimensional Tolerance +/- 1/4" (6.35mm)
2. Evaporator and Condenser Entering Fluid Connection is the Bottom Connection, where applicable.
   Evaporator and Condenser Leaving Fluid Connection is the Top Connection, where applicable.

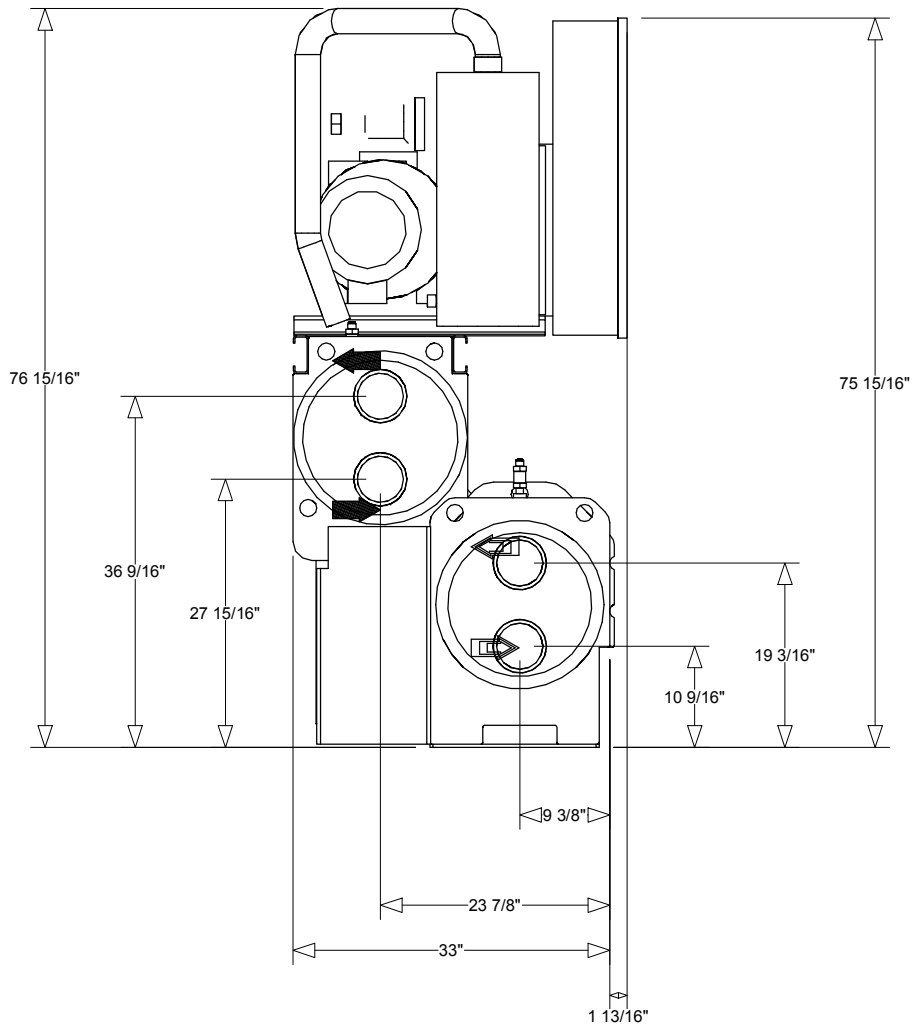


LEFT END VIEW

## Unit Dimensions - Water Cooled Helical Rotary Chillers (Duplex)
## Item: A1 Qty: 1 Tag(s): RTWD-1

| | | |
|---|---|---|
| Evaporator Water Connection Size | 5 In (125 mm) | NPS Pipe Size |
| Condenser Water Connection Size | 5 In (125 mm) | NPS Pipe Size |
| Evaporator Water Volume | 15 Gal/ 57 Liters | |
| Condenser Water Volume | 19 Gal/ 72 Liters | |

NOTES:
1. Dimensional Tolerance +/- 1/4" (6.35mm)
2. Evaporator and Condenser Entering Fluid Connection is the Bottom Connection, where applicable.
   Evaporator and Condenser Leaving Fluid Connection is the Top Connection, where applicable.

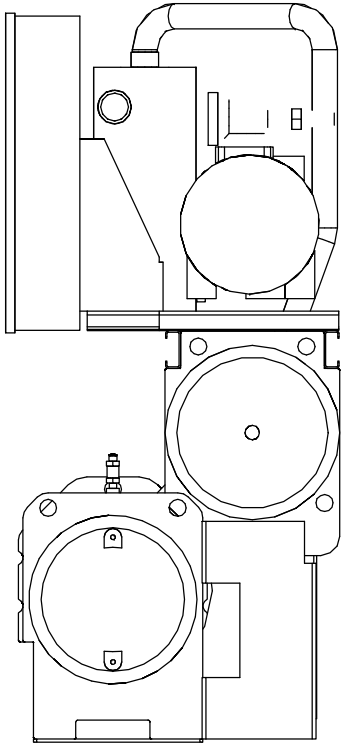

RIGHT END VIEW

## Unit Dimensions - Water Cooled Helical Rotary Chillers (Duplex)
**Item: A1 Qty: 1 Tag(s): RTWD-1**

| | | |
|---|---|---|
| Evaporator Water Connection Size | 5 In (125 mm) | NPS Pipe Size |
| Condenser Water Connection Size | 5 In (125 mm) | NPS Pipe Size |
| Evaporator Water Volume | 15 Gal/ 57 Liters | |
| Condenser Water Volume | 19 Gal/ 72 Liters | |

NOTES:
1. Dimensional Tolerance +/- 1/4" (6.35mm)
2. Evaporator and Condenser Entering Fluid Connection is the Bottom Connection, where applicable.
   Evaporator and Condenser Leaving Fluid Connection is the Top Connection, where applicable.

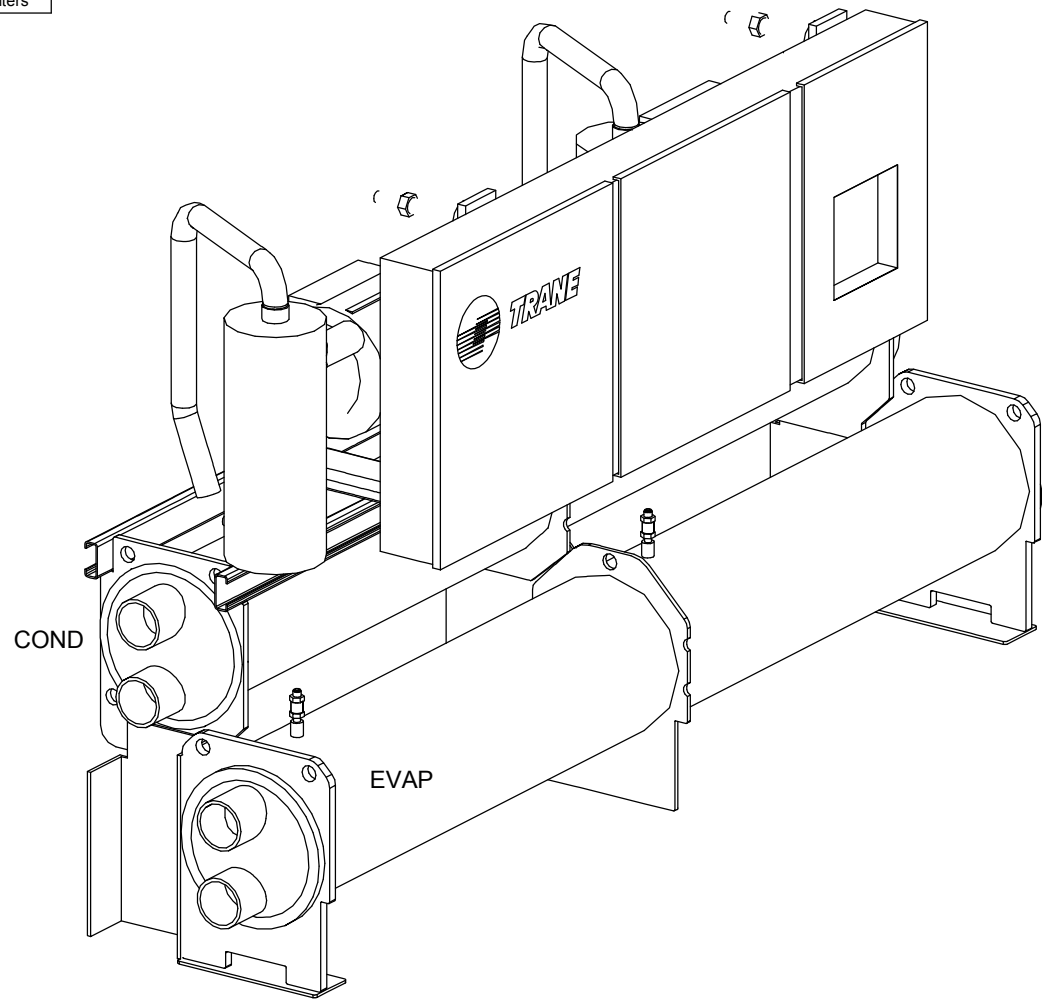


ISOMETRIC VIEW

WEIGHTS/RIGGING/CLEARANCE PAGE 1 OF 2

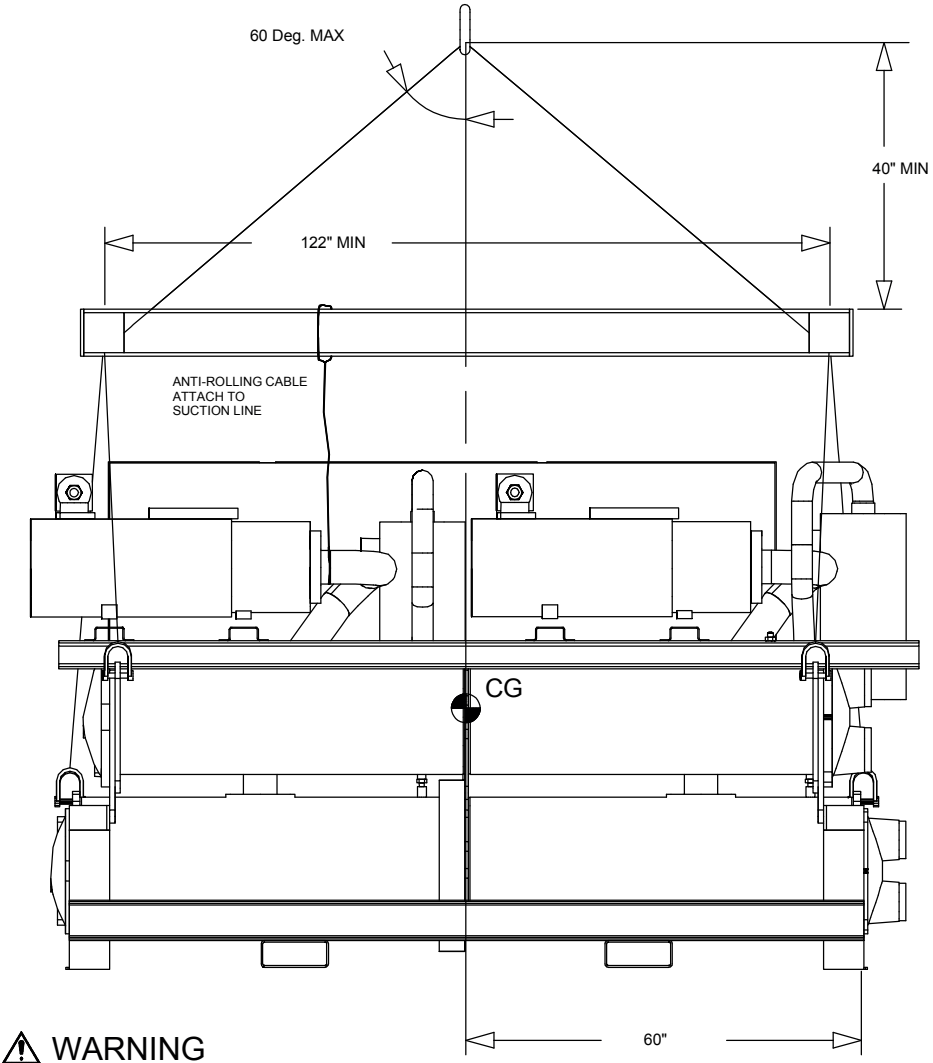


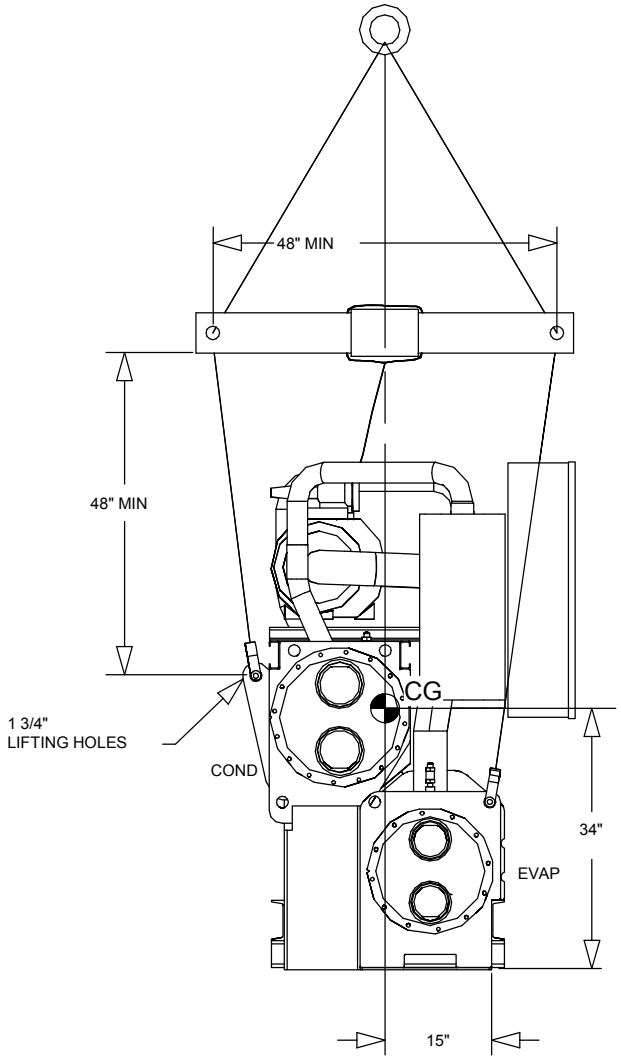


## ⚠ WARNING

IMPROPER LIFTING AND MOVING

DO NOT USE CABLES (CHAINS OR SLINGS) EXCEPT AS SHOWN. LIFTING BEAM CROSSBARS MUST BE POSTIONED SO LIFTING CABLES DO NOT CONTACT THE SIDES OF THE UNIT. EACH OF THE CABLES (CHAINS OR SLINGS) USED TO LIFT THE UNIT MUST BE CAPABLE OF SUPPORTING THE ENTIRE WEIGHT OF THE UNIT. TEST LIFT UNIT AT MINIMAL HEIGHT TO VERIFY EVEN LEVEL LIFT. LIFTING CABLES (CHAINS OR SLINGS) MAY NOT BE OF THE SAME LENGTH. ADJUST AS NECESSARY FOR EVEN LEVEL LIFT. THE HIGH CENTER OF GRAVITY ON THIS UNIT REQUIRES THE USE OF AN ANTI-ROLLING CABLE (CHAIN OR SLING). TO PREVENT UNIT FROM ROLLING, ATTACH CABLE (CHAIN OR SLING) WITH NO TENSION AND MINIMAL SLACK AROUND COMPRESSOR SUCTION PIPE AS SHOWN.

NOTE:
APPROXIMATE LOCATION OF CENTER OF GRAVITY SHOWN IN DIAGRAMS

NOTE:
IF UNIT IS DISASSEMBLED, SEE SERVICE BULLETIN FOR LIFTING AND RIGGING OF COMPONENTS.

DO NOT USE FORK LIFT TO MOVE OR LIFT UNIT UNLESS UNIT HAS LIFTING BASE WITH LOCATIONS MARKED BY CAUTION LABELS INSTALLED. OTHER LIFTING ARRANGEMENTS COULD RESULT IN DEATH, SERIOUS INJURY OR EQUIPMENT DAMAGE.

# WEIGHTS/RIGGING/CLEARANCE PAGE 2 OF 2

NOTE: END CLEARANCE REQUIRED ON BOTH ENDS OF UNIT FROM END OF WATER BOX OR WATERBOX CONNECTION.

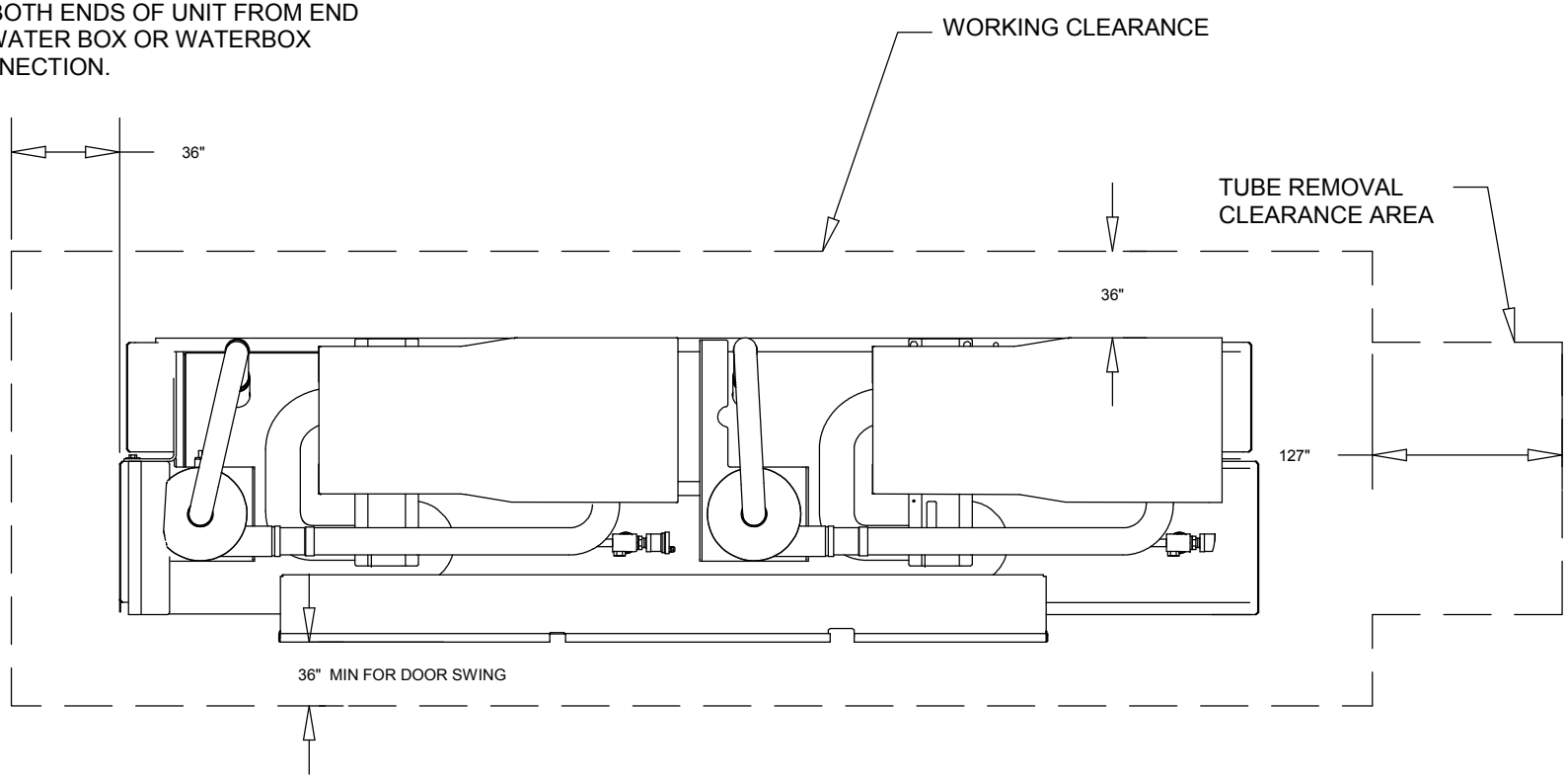


NOTE: FOR CONTROL PANEL SIDE CLEARANCE, 42" (1067mm) CLEARANCE IS REQUIRED TO OTHER GROUNDED PARTS.
TWO UNITS WITH PANELS FACING EACH OTHER OR OTHER LIVE PARTS, REQUIRE A CLEARANCE OF 48" (1220mm).
ALLOW 36" OF CLEARANCE ABOVE THE STARTER ELECTRICAL CONNECTION DOOR.

| UNIT SIZE | SHIPPING WEIGHT |
|---|---|
| 120 | 6247.9 lb |

NOTE:
1. SUBTRACT 300lbs (663kg) FOR UNITS WITHOUT BASE RAIL FORKLIFT OPTION.
2. ADD 137lbs (62kg) FOR UNITS WITH SOUND ATTENUATOR OPTION.
3. WEIGHTS ARE TYPICAL FOR UNITS WITH R134A CHARGE AND OIL CHARGE.

## CUSTOMER WIRE SELECTION TABLE

POWER WIRE SELECTION TO TERMINAL BLOCK(1X1)

| UNIT SIZE | UNIT EFF | VOLTAGE |
|---|---|---|
| 120 | STD | 460 |

| LUG WIRE SIZE RANGE (PER PHASE) CIR 1 & 2 (SINGLE PT POWER) | SHORT CIRCUIT RATING: (RMS SYMETRICAL AMPS) |
|---|---|
| #4-500 | 10000.00 A |

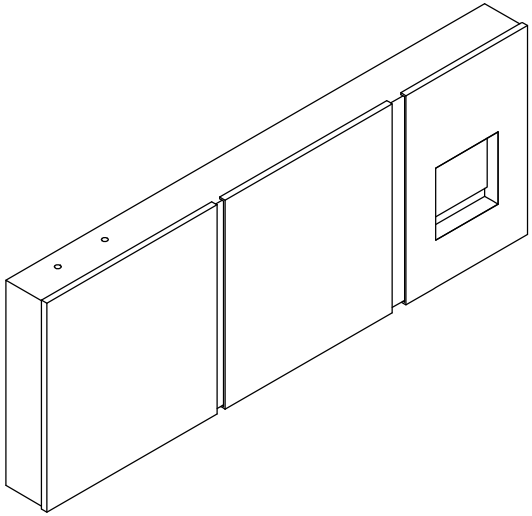

ISOMETRIC VIEW

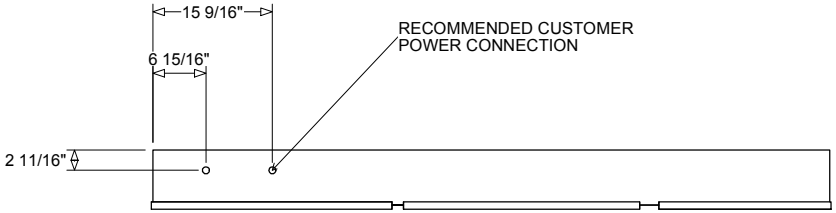


TOP VIEW

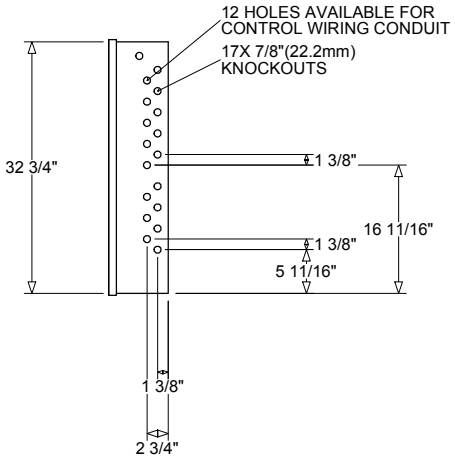


RIGHT END VIEW

| UNIT SIZE | UNIT EFF | MOUNTING LOCATIONS AND POINT LOAD WEIGHTS | | | | TOTAL OPERATING WEIGHT |
|---|---|---|---|---|---|---|
| | | 1 | 2 | 3 | 4 | |
| 120 | STD | 1689.0 lb | 1795.0 lb | 1477.0 lb | 1569.0 lb | 6530.1 lb |

| MOUNTING LOCATIONS AND ISOLATOR PART NUMBER | | | | |
|---|---|---|---|---|
| 1 | 2 | 3 | 4 | MAX LOAD |
| NOTE: NO ISOLATORS HAVE BEEN SELECTED. POINT LOADS ARE SUPPLIED FOR CUSTOMER REFERENCE ONLY. | | | | |

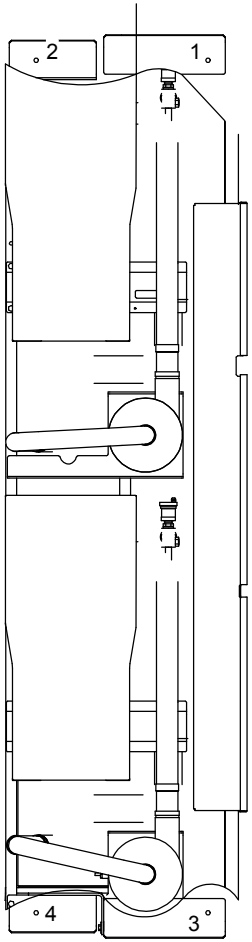


STARTER/CONTROL PANEL THIS SIDE OF UNIT

NOTE: NO ISOLATORS HAVE BEEN SELECTED. POINT LOADS ARE SUPPLIED FOR CUSTOMER REFERENCE ONLY.

# MOUNTING LOCATIONS

TOP VIEW
(ISOLATOR MOUNTING LOCATION)

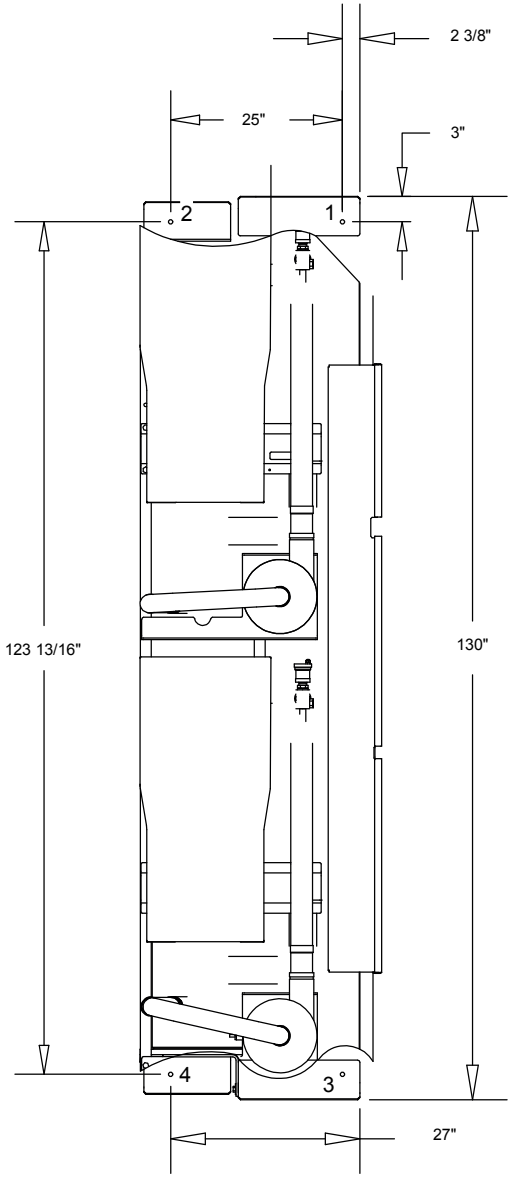


MOUNTING HOLE DIAMETER 5/8"

TOP VIEW
(ISOLATION PAD LOCATION)

NOTES:
1. Isolation pads to be mounted flush with edge of support bracket and to dimensions as shown.
2. Isolation pads not shipped when isolators are selected as field installed option.

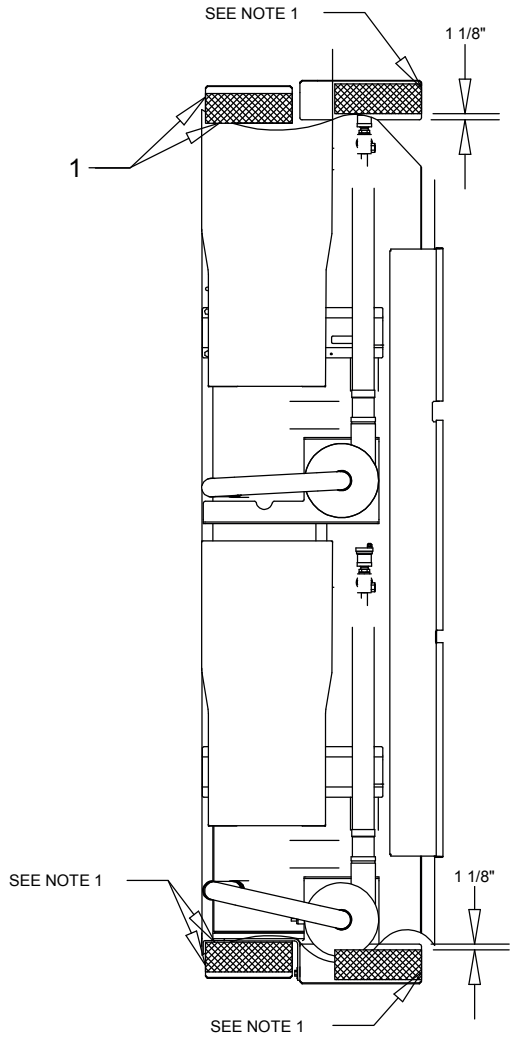


STARTER/CONTROL PANEL THIS SIDE OF UNIT

CAUTION

USE COPPER CONDUCTORS ONLY!
UNIT TERMINALS ARE NOT DESIGNED TO ACCEPT OTHER TYPES OF CONDUCTORS.

FAILURE TO DO SO MAY CAUSE DAMAGE TO THE EQUIPMENT.

⚠ WARNING

HAZARDOUS VOLTAGE!
DISCONNECT ALL ELECTRIC POWER INCLUDING REMOTE DISCONNECTS AND FOLLOW LOCK OUT AND TAG PROCEDURES BEFORE SERVICING. INSURE THAT ALL MOTOR CAPACITORS HAVE DISCHARGED STORED VOLTAGE. UNITS WITH VARIABLE SPEED DRIVE, REFER TO DRIVE INSTRUCTIONS FOR CAPACITOR DISCHARGE.

FAILURE TO DO THE ABOVE COULD RESULT IN DEATH OR SERIOUS INJURY.

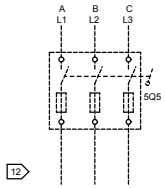


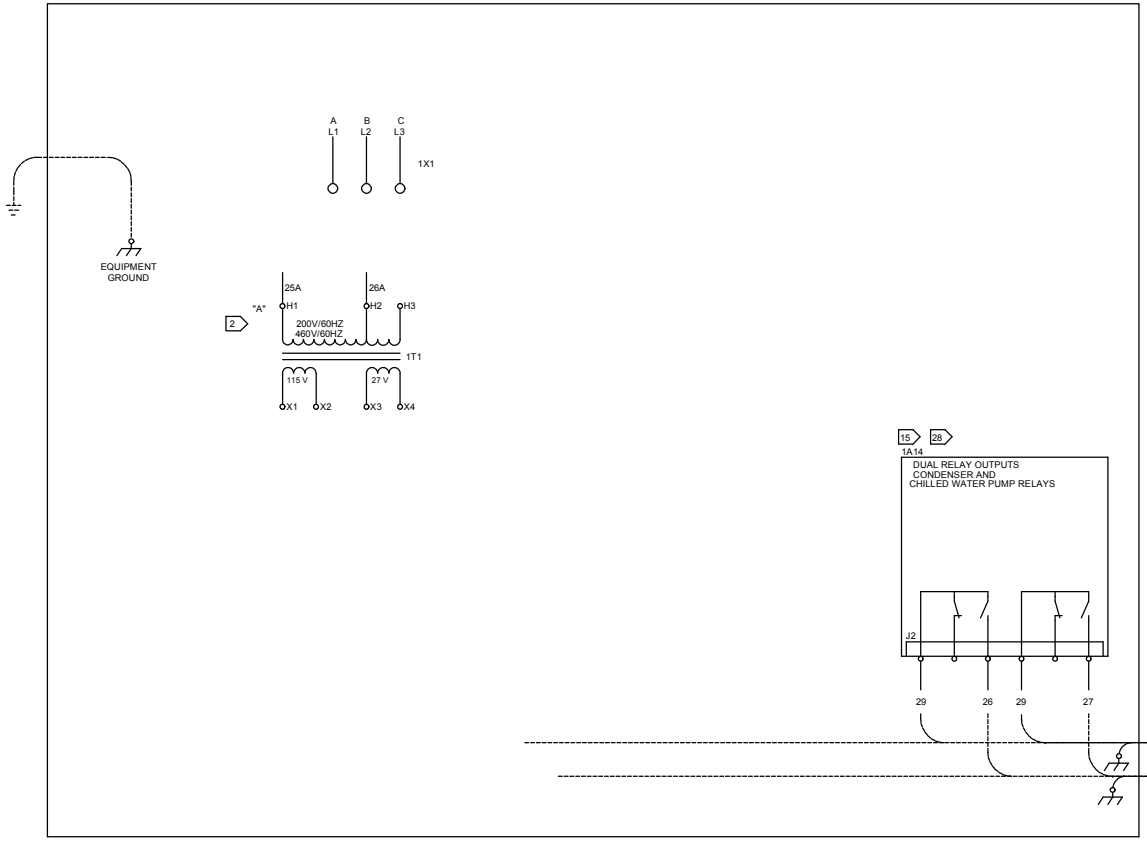


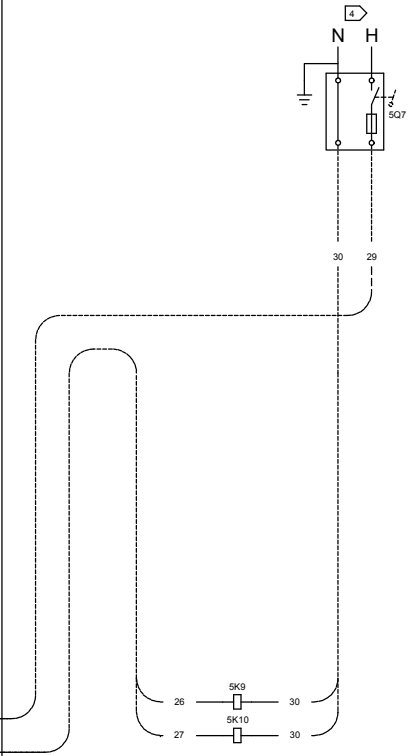


FIELD WIRING PAGE 1 OF 3
CONTINUED ON NEXT PAGE

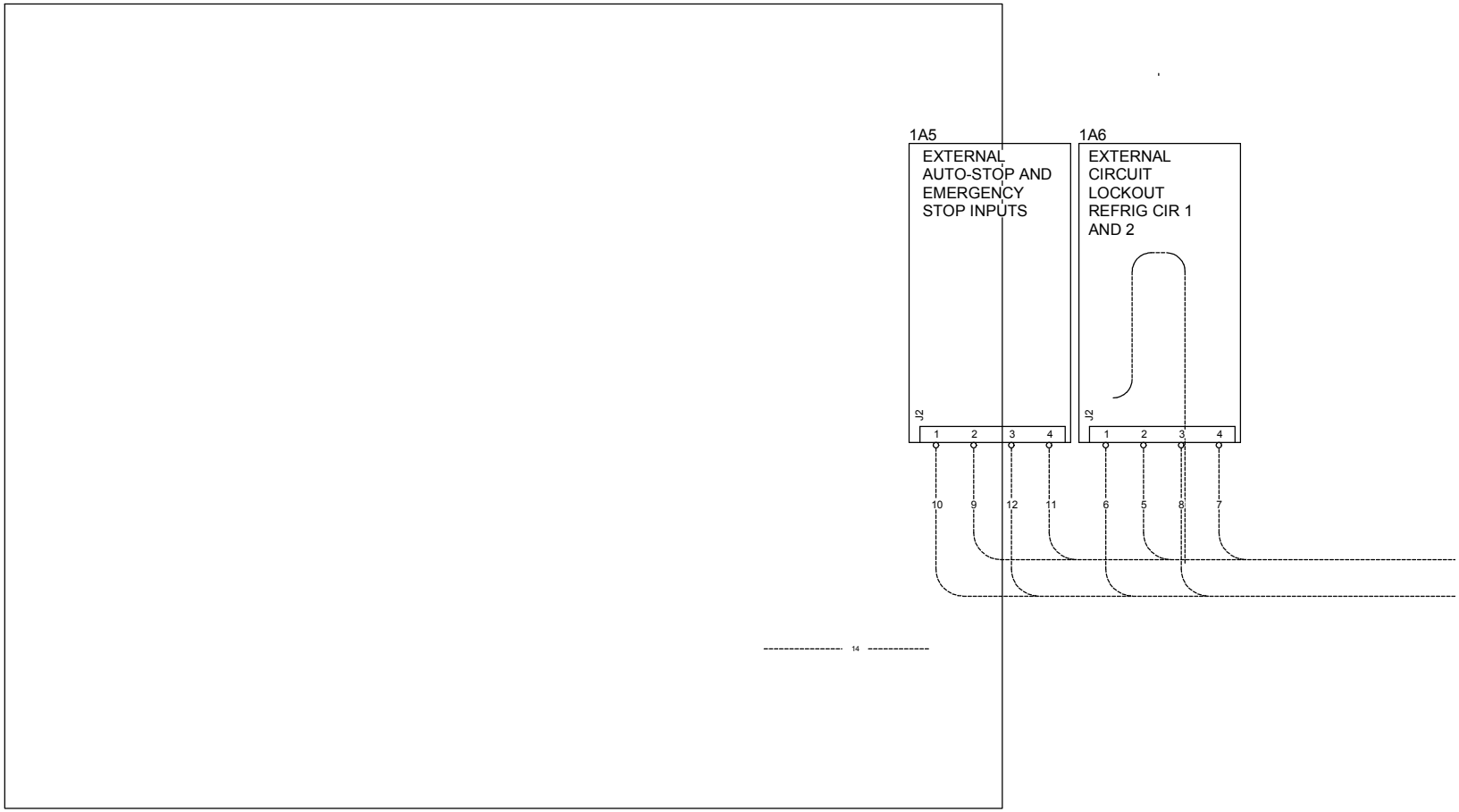


WARNING
HAZARDOUS VOLTAGE!
DISCONNECT ALL ELECTRIC POWER INCLUDING REMOTE DISCONNECTS AND FOLLOW LOCK OUT AND TAG PROCEDURES BEFORE SERVICING. INSURE THAT ALL MOTOR CAPACITORS HAVE DISCHARGED STORED VOLTAGE. UNITS WITH VARIABLE SPEED DRIVE, REFER TO DRIVE INSTRUCTIONS FOR CAPACITOR DISCHARGE.

FAILURE TO DO THE ABOVE COULD RESULT IN DEATH OR SERIOUS INJURY.

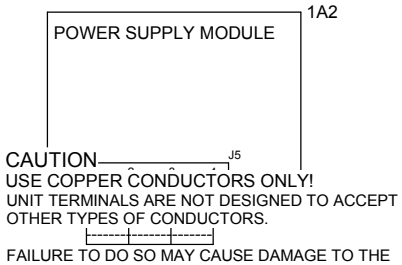


CAUTION
USE COPPER CONDUCTORS ONLY!
UNIT TERMINALS ARE NOT DESIGNED TO ACCEPT OTHER TYPES OF CONDUCTORS.

FAILURE TO DO SO MAY CAUSE DAMAGE TO THE EQUIPMENT.

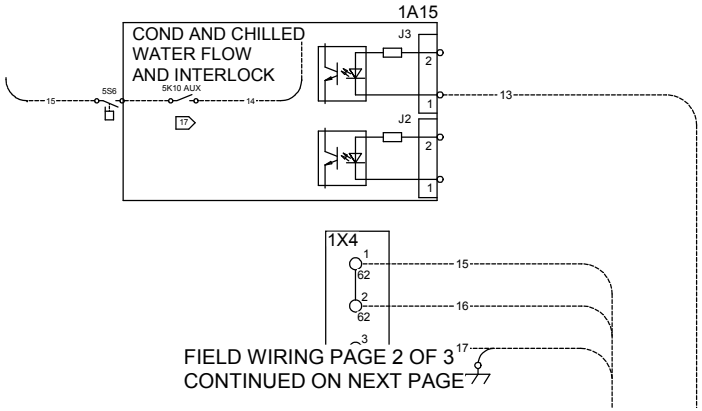


FIELD WIRING PAGE 2 OF 3
CONTINUED ON NEXT PAGE

# FIELD WIRING NOTES SECTION

1 SINGLE SOURCE POWER IS PROVIDED AS STANDARD ON THESE PRODUCTS, DUAL SOURCE POWER IS OPTIONAL. FIELD CONNECTIONS FOR SINGLE SOURCE POWER ARE MADE TO 1X1, 1Q1, OR 1Q2. WHEN THE OPTIONAL DUAL SOURCE POWER IS SELECTED THE FIELD CONNECTIONS FOR CIRCUIT #2 ARE MADE TO 1X2, 1Q3, OR 1Q4.

2 FOR VOLTAGES 200V/60 HZ, 220V/50HZ, 380V/60HZ, 460V/60HZ, WIRE 26A SHALL BE CONNECTED TO H2. FOR VOLTAGES 230V/60HZ & 575V/60HZ, WIRE 26A SHALL BE CONNECTED TO H3. 400V/50HZ UNIT IS FACTORY WIRES WITH 26A CONNECTED TO H3 - RECONNECT WIRE 26A TO H2 FOR 380V/50HZ OR H4 FOR 415V/50HZ. H4 IS ONLY AVAILABLE WITH 400V/50HZ PANELS.

4 CUSTOMER SUPPLIED POWER 115/60/1 OR 220/50/1 TO POWER RELAYS. MAX. FUSE SIZE IS 15 AMPS. GROUND ALL CUSTOMER SUPPLIED POWER SUPPLIES AS REQUIRED BY APPLICABLE CODES. GREEN GROUND SCREWS ARE PROVIDED IN UNIT CONTROL PANEL.

11. REFER TO RTWD ELECTRICAL SCHEMATIC FOR SPECIFIC ELECTRICAL CONNECTION INFORMATION AND NOTES PERTAINING TO WIRING INSTALLATION.

12 ALL UNIT POWER WIRING MUST BE 600 VOLT COPPER CONDUCTORS ONLY AND HAVE A MINUMUM TEMPERATURE INSULATION RATING OF 90 DEGREE C. REFER TO UNIT NAMEPLATE FOR MINIMUM CIRCUIT AMPACITY AND MAXIMUM OVERCURRENT PROTECTION DEVICE. PROVIDE AN EQUIPMENT GROUND IN ACCORDANCE WITH APPLICABLE ELECTRIC CODES. REFER TO WIRE RANGE TABLE FOR LUG SIZES.

13. ALL FIELD WIRING MUST BE IN ACCORDANCE WITH NATIONAL ELECTRIC CODE AND LOCAL REQUIREMENTS.

CAUTION
USE COPPER CONDUCTORS ONLY!
UNIT TERMINALS ARE NOT DESIGNED TO ACCEPT OTHER TYPES OF CONDUCTORS.

FAILURE TO DO SO MAY CAUSE DAMAGE TO THE EQUIPMENT.

⚠ WARNING
HAZARDOUS VOLTAGE!

DISCONNECT ALL ELECTRIC POWER INCLUDING REMOTE DISCONNECTS AND FOLLOW LOCK OUT AND TAG PROCEDURES BEFORE SERVICING. INSURE THAT ALL MOTOR CAPACITORS HAVE DISCHARGED STORED VOLTAGE. UNITS WITH VARIABLE SPEED DRIVE, REFER TO DRIVE INSTRUCTIONS FOR CAPACITOR DISCHARGE.

FAILURE TO DO THE ABOVE COULD RESULT IN DEATH OR SERIOUS INJURY.

14. ALL CUSTOMER CONTROL CIRCUIT WIRING MUST BE COPPER CONDUCTORS ONLY AND HAVE A MINIMUM INSULATION RATING OF 300 VOLTS. EXCEPT AS NOTED, ALL CUSTOMER WIRING CONNECTIONS ARE MADE TO CIRCUIT BOARD MOUNTED BOX LUGS WITH A WIRE RANGE OF 14 TO 18 AWG.

15 UNIT PROVIDED DRY CONTACTS FOR THE CONDENSER/CHILLED WATER PUMP CONTROL. RELAYS ARE RATED FOR 7.2 AMPS RESISTIVE, 2.88 AMPS PILOT DUTY, OR 1/3 HP, 7.2 FLA AT 120 VOLTS 60 HZ, CONTACTS ARE RATED FOR 5 AMPS GENERAL PURPOSE DUTY 240 VOLTS.

16 CUSTOMER SUPPLIED CONTACTS FOR ALL LOW VOLTAGE CONNECTIONS MUST BE COMPATABLE WITH DRY CIRCUIT 24 VOLTS DC FOR A 12 mA RESISTIVE LOAD. SILVER OR GOLD PLATED CONTACTS RECOMMENDED.

17 FLOW SWITCH AND INTERLOCK CONTACTS MUST BE ACCEPTABLE FOR USE IN A 120 VOLT 1 mA CIRCUIT OR A 220 VOLT 2mA CIRCUIT.

28 ALL RTUD UNITS (SYSTEMS WITH A REMOTE CONDENSER) REQUIRE CHILLED WATER PUMPS BE CONTROLLED BY THE TRANE CH530 TO AVOID CATASTROPIC DAMAGE TO THE EVAPORATOR DUE TO FREEZING.
IT IS STRONGLY RECOMMENDED THAT CHILLED WATER PUMP CONTROL ALSO BE USED ON RTWD TO PROVIDE PROPER UNIT OPERATION.

# Appendix G

2003 Wellhead Protection Plan

# TOWN OF YACOLT
# WELLHEAD PROTECTION PLAN
# UPDATE

*Prepared for:*

**Clark Public Utilities**
**PO Box 8900**
**Vancouver, WA 98250**

*Prepared by:*

**Pacific Groundwater Group**
**2377 Eastlake Ave. E, Suite 200**
**Seattle, Washington 98102**

**206.329.0141**
*pgwg.com*

**JM8905.37**
**May 12, 2003**

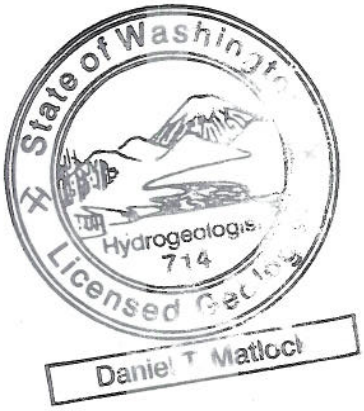

## TABLE OF CONTENTS


**1 INTRODUCTION ..... 1**

**2 HYDROGEOLOGIC FRAMEWORK ..... 1**

2.1 SURFACE WATER ..... 1
2.2 GROUNDWATER ..... 1
*2.2.1 Principal Aquifers ..... 1*
2.2.1.1 Yacolt Aquifer ..... 1
2.2.1.2 Bedrock Aquifer ..... 2
*2.2.2 Seasonal Water Table Fluctuations ..... 2*
*2.2.3 Groundwater Flow Directions and Hydraulic Gradients ..... 2*
2.3 GROUNDWATER/SURFACE WATER INTERACTIONS ..... 3

**3 EXISTING WATER QUALITY ..... 3**

**4 WELLHEAD PROTECTION CAPTURE ZONE DELINEATIONS ..... 3**

**5 RISK ASSESSMENT ..... 4**

5.1 DATA SOURCES ..... 4
5.2 CONTAMINANT SOURCES ..... 4
*5.2.1 Underground Storage Tanks ..... 4*
5.2.1.1 Potential Risks ..... 4
5.2.1.2 Occurrence in the Yacolt Area ..... 5
*5.2.2 Storm Water ..... 5*
5.2.2.1 Potential Risks ..... 6
5.2.2.2 Occurrence in the Yacolt Valley ..... 6
*5.2.3 On-Site Septic Systems ..... 6*
5.2.3.1 Potential Risks ..... 6
5.2.3.2 Occurrence in the Yacolt Valley ..... 7
*5.2.4 Parks, Agriculture, and Animal Husbandry ..... 7*
*5.2.5 Transportation Spills ..... 7*
5.3 WELL SUSCEPTIBILITY AND VULNERABILITY ..... 7

**6 WATER RESOURCE PROTECTION STRATEGIES ..... 8**

6.1 MONITORING ..... 8
*6.1.1 Water Quality ..... 8*
*6.1.2 Water Levels ..... 8*
6.2 SEPTIC SYSTEM MAINTENANCE ..... 9
6.3 PUBLIC EDUCATION ..... 9
*6.3.1 Turf Management ..... 9*

**7 REFERENCES ..... 10**


## LIST OF FIGURES


Figure 1 Well Locations, Capture Zones, and Potential Contaminant Source Locations
Figure 2 Generalized Subsurface Cross Section A-A'
Figure 3 Generalized Subsurface Cross Section B-B'
Figure 4 Water Level Trends for Yacolt Supply Wells
Figure 5 Capture Zones and Environmental Sites

# 1 INTRODUCTION

The Town of Yacolt obtains its entire water supply from five wells, 403 – 407[1], located within Town limits that produce water from a relatively shallow, unconfined aquifer. A wellhead protection plan for the Town of Yacolt was prepared with support by the U. S. Environmental Protection Agency (EPA) in 1993 (CCN, 1993). A hydrogeologic study of Yacolt, prepared by Hart Crowser in 1996, obtained and summarized new hydrogeologic information from three new groundwater monitoring wells and four new stream staff gages. This letter report is an update to the EPA wellhead protection plan, using information from the Hart Crowser report and recent information for storm water facilities, septic systems, and underground storage tanks. A water system plan (WSP) has been prepared for the Town of Yacolt (Odell, 2003). The WSP addresses the wellhead protection plan update for the Town of Yacolt by referencing this letter report.

# 2 HYDROGEOLOGIC FRAMEWORK

The Yacolt Valley is a faulted bedrock basin in the Cascade Mountain foothills, extending about 6 miles in length and about one mile in width. The valley was filled with unconsolidated sediments of fluvial (stream deposits) and glaciofluvial (stream deposits from glaciers) origin. The unconsolidated valley sediments consist of a variable mixture of gravel and sand with variable percentages of silt. There are few distinct lithologic units discernable within the sediments. The unconsolidated sediments are approximately 20 to 140 feet in thickness and overlie bedrock. Subsurface cross sections from the 1996 report are shown on Figures 2 and 3.

This section briefly summarizes the detailed discussion in the Hart Crowser report (1996).

## 2.1 SURFACE WATER

The Yacolt Valley is bounded by Cedar Creek to the north, Yacolt Creek to the west, and Weaver and Big Tree Creeks to the east and southeast. A surface water divide occurs along the northern edge of the Town limits. To the north and north-east of the Town, surface water drains toward Cedar Creek. Drainage within the Town limits, and west and south of it, is toward Yacolt Creek. Weaver and Big Tree Creeks drain the easternmost portion of the valley.

## 2.2 GROUNDWATER

### 2.2.1 PRINCIPAL AQUIFERS

#### 2.2.1.1 Yacolt Aquifer

An unconfined (water table) aquifer, referred to as the Yacolt Aquifer, occurs within the unconsolidated valley sediments underlying the Yacolt Valley. The Yacolt Aquifer comprises a variable assemblage of sediments. Although the sediments vary within the aquifer, there are few discernable distinct lithologic units. Therefore, the Yacolt Aquifer is expected to have variable characteristics throughout the valley.

[1] Before Clark Public Utilities began management of the Town of Yacolt water system, the Town supply wells were referred to as wells 1 – 6. CPU renamed those wells 401 – 406. In 2001, CPU installed well 407 near to 405 to provide greater reliability of supply during drought periods.

Based on available information, there appears to be no continuous low-permeability unit within the valley. Therefore, all portions of the valley sediments are in hydraulic connection and act as a single hydrostratigraphic unit. The Town water supply wells are completed in a productive coarse gravel zone, which has been differentiated as a distinct aquifer unit in other reports (CCN, 1993).

#### 2.2.1.2 Bedrock Aquifer

Bedrock underlies the Yacolt Aquifer and serves as a water supply for some wells in the valley and the surrounding uplands. Limited water level data from bedrock wells indicate artesian pressure in the bedrock and water levels higher than water level in the overlying Yacolt aquifer. This suggests that the bedrock may provide some recharge to the Yacolt aquifer. However, information from the Bedrock Aquifer is limited.

### 2.2.2 SEASONAL WATER TABLE FLUCTUATIONS

The depth to the water table beneath the Yacolt Valley varies with location and season. The valley floor slopes downward toward the southeast and toward the west. Depth to water is greater where land surface elevation is higher.

Hydrographs from data collected in 1995 from January through November (Hart Crowser, 1996) indicate that seasonal water level changes ranged from 12 to 25 feet. Hydrographs for wells 403 – 406 are shown on Figure 4 and indicate seasonal water level changes are about 20 to 30 feet. Hydrographs indicate that groundwater level decline occurs gradually from about February to October and then water level rise occurs rapidly during November and December.

### 2.2.3 GROUNDWATER FLOW DIRECTIONS AND HYDRAULIC GRADIENTS

Figure 1 shows water table elevation contours and inferred groundwater flow directions for the Yacolt Aquifer for July 1995. Water levels in July are neither the highest nor the lowest during the year. Figure 1 indicates that there is a water table "saddle" beneath the town. Groundwater flows into the saddle from the mountains on the east and west and moves away from the saddle by moving north towards Cedar Creek within the Cedar Creek groundwater basin and southeast beneath the valley floor, within the Yacolt River groundwater basin.

Water table elevations are higher in the winter than in summer and fall. The water table contour pattern in winter, with the saddle beneath the Town, is similar to July. Conversely, water level elevations in October are the lowest during the year and the water table contours are slightly different from July and January. During October, the water table contours indicate that there is not a groundwater saddle. Instead, the highest groundwater elevation is in the northernmost part of the Yacolt Valley. During this brief time period, groundwater flows into the valley from the mountains on either side and from Cedar Creek. Groundwater flow direction beneath the Town is only southerly during the low water level time of year (October). Gradients are largest during winter and smallest during fall.

## 2.3 GROUNDWATER/SURFACE WATER INTERACTIONS

Groundwater and surface water monitoring data indicate that Cedar Creek and the southern portions of Yacolt and Weaver Creeks are in direct hydraulic connection with the Yacolt Aquifer. As the water table rises during the wet season, longer reaches of both Yacolt and Weaver Creeks are in direct connection with the aquifer. These reaches of the stream act as discharge points for the aquifer system. It is likely that the upper reaches of Yacolt and Weaver Creeks are losing reaches throughout the year, recharging the groundwater in the underlying Yacolt Aquifer by infiltration through their creek beds.

# 3 EXISTING WATER QUALITY

The 1996 Hart Crowser investigation summarized the Town's groundwater quality data from the water supply wells for the period 1984 through 1995 and data collected from monitoring wells installed during the investigation. For the investigation, four rounds of water quality sampling were conducted on four monitoring wells during 1995 and analyzed for nitrate, nitrite, total Kjeldahl Nitrogen, chloride, and sulfate.

Data indicate that groundwater quality in the Yacolt Aquifer beneath the Town has been impacted by septic systems, relative to natural water quality located upgradient. Nitrate is the contaminant of concern. Statistical analysis indicates a background nitrate concentration of 0.5 mg-N/l while nitrate concentrations within the town of Yacolt are about 3.6 mg-N/l. As part of the anti-degradation policy (WAC 173-200), an enforcement limit of 4.27 mg-N/l was calculated using Department of Ecology methodology. The anti-degradation policy requires groundwaters that have natural levels below the health-based criteria (MCLs) to be protected at their natural levels (WDOE, 1995).

# 4 WELLHEAD PROTECTION CAPTURE ZONE DELINEATIONS

Capture zones were delineated as part of the 1996 investigation. Simplified numerical groundwater modeling of the Yacolt Aquifer was conducted to provide a screening-level assessment of the Town's water supply capture zones. The delineated capture zones are shown on Figure 1.

A capture zone is that portion of the aquifer contributing groundwater to a supply well. The capture zone is essentially identical to Zone of Contribution (ZOC) in Washington State's Wellhead Protection Program (WHPP; Washington State Department of Health [DOH], 1993), except that the capture zone does not extend beyond the limits of the aquifer. The ZOC should include surface water drainages which contribute directly to groundwater recharge. The wellhead protection area delineations prepared by AGI (1992) used the fixed radius method and therefore, do not consider the regional groundwater flow system. The delineations prepared by Hart Crowser (1996) utilized a two-dimensional, steady state, numerical groundwater flow model developed for the Yacolt Aquifer using FLOWPATH (Waterloo Hydrogeologic Software, 1992). The 1996 delineations are based on an evaluation of the regional groundwater flow system and are considered more accurate than the 1992 fixed radius delineations. The 1996 capture zones are presented in this report (Figure 5).

Because of the different groundwater flow conditions during October and January, delineations were created for both conditions (Hart Crowser, 1996). The capture zones shown on Figure 5 combine the winter (high water table) and fall (lowest water table) conditions. During low water table conditions, groundwater flow is from Cedar Creek towards wells 404 to 407. However, this condition only lasts about three months and water does not reach from Cedar Creek to the wells before flow direction reverses, and groundwater moves again from south to north. Therefore, induced recharge that comes from Cedar Creek during the time of low water table conditions (fall), flows north, back towards Cedar Creek during the time of high water table conditions (winter, spring, and summer). The capture zone delineations (Figure 5) combine capture zone delineations for the low and high water table conditions.

# 5 RISK ASSESSMENT

## 5.1 DATA SOURCES

Potential and known contaminant sources that lie within the study area were investigated and mapped using three data sources:

- Maps of underground storage tanks and storm water management facilities from the Wellhead Protection Plan for the Town of Yacolt, Washington (1993).
- Commercially available environmental database purchased from VistaInfo.
- Washington Department of Ecology's UST database

## 5.2 CONTAMINANT SOURCES

### 5.2.1 UNDERGROUND STORAGE TANKS

#### 5.2.1.1 Potential Risks

Contamination in soil and groundwater caused by leaking underground storage tanks ("LUSTs") is a major environmental, legal, and regulatory issue. In 1991, the EPA estimated that 35 percent of all underground storage tanks (USTs) could be leaking (EPA, 1991). USTs usually contain flammable motor fuels or heating oils, however, they may contain other compounds. Documented LUSTs are considered confirmed contaminant sources. The most common causes of leaks are structural failure, corrosion, improper fittings, and improper installation. All USTs are considered potential sources of contamination.

Leakage from USTs and associated piping often occurs without detection. Even relatively small amounts of certain compounds can adversely impact groundwater quality. For instance, 1 gallon of gasoline can render a million gallons of groundwater "unpotable" for several decades. A 1/4-inch hole in a UST can release up to 930 gallons of gasoline in a single day. Once released from and UST, some VOCs and petroleum products can rapidly migrate to groundwater, a problem that is serious in areas like the Yacolt Valley that has a relatively shallow and permeable unconfined aquifer.

Of the many materials stored in USTs, solvents are considered the most toxic. However, petroleum products may pose a greater risk because a large number of tanks contain them. In addition,

petroleum products contain many potential contaminants, including three EPA priority pollutants: benzene, toluene, and ethyl benzene. Benzene is a known human carcinogen.

#### 5.2.1.2 Occurrence in the Yacolt Area

Data from VistaInfo and the Wellhead Protection Report (1993) indicate that there were six locations with one or more underground storage tanks and a total of 13 USTs in 1993. 2003 data for USTs in Washington from Washington Department of Ecology's website indicate that currently there are only two sites in the Yacolt Valley with operational USTs. The others have been removed or closed in place. Table 1 summarizes the operational UST site names, capacity, substance, and age. Figure 1 shows the location of the two sites with currently operational USTs. There are no reports of leaking underground storage tanks. The Yacolt Trading Post site occurs within the five-year capture zone for wells 404 - 407. The WorldCom site does not occur within the capture zones for the Town wells.

**Table 1. Summary of Registered, Operating Underground Storage Tanks Yacolt, Washington**

| Site Name | | Capacity | Substance | Age (yrs) | Capture Zone |
|---|---|---|---|---|---|
| Yacolt Trading Post | 315 N Amboy Rd | 10,000 - 20,000 | Leaded gas | 13 | 5-year |
| | | 10,000 - 20,000 | Unleaded Gas | 13 | |
| | | 2,000 - 5,000 | Unleaded Gas | 13 | |
| | | 5,000 - 10,000 | Diesel Fuel | 13 | |
| Worldcom | | 10,000 - 20,000 | Diesel Fuel | 11 | none |

### 5.2.2 STORM WATER

Storm water is produced when rainfall or other precipitation accumulates faster than it can evaporate, be used by plants, or infiltrate to the subsurface. More storm water runoff occurs where there are impermeable surfaces such as rooftops, driveways, street, and highways. Even grass lawns produce more runoff than forests and pastures.

Storm water typically contains pollutants such as sediment, nutrients, bacteria, oils and grease, metals, and other toxicants. Many of these contaminants come from air pollution, motor vehicles, application of pesticides and fertilizers, soil erosion, and pet feces. In general, contaminant concentrations in storm water are similar for all land uses, with slightly higher nitrate concentrations in residential areas, and higher zinc concentrations in commercial areas. Concentrated sources of storm water contamination may also occur if undiluted pollutants (e.g. fertilizer, gasoline) are accidentally or intentionally spilled and enter storm drains.

Storm water contamination has primarily been a concern for surface water pollution because most urban runoff is directed to streams, lakes, and other water bodies with fish and other aquatic life that are sensitive to common storm water contaminants. However, where storm water is discharge to infiltration areas, there is also a potential for groundwater contamination.

#### 5.2.2.1 Potential Risks

Concern over potential groundwater contamination from storm water has been recognized by several governmental agencies in western Washington. King County's Surface Water Design Manual (King County, 1994) requires liners for wetponds, water quality swales, and other storm water quality treatment facilities located over rapidly draining soils. Washington Department of Ecology's Storm Water Management Manual for the Puget Sound Basin requires storm water treatment prior to infiltration to protect groundwater quality (WDOE, 1992). Storm water runoff from lawns and agricultural areas can introduce nitrate, herbicides, pesticides, and bacterial contaminants.

Drywells are constructed with materials which permit water to drain into the soil at a relatively high rate. Drywells introduce storm water below the surface where it comes into contact with local groundwater resources. Drywells introduce the pollutants carried in the storm water into the groundwater system.

#### 5.2.2.2 Occurrence in the Yacolt Valley

The Town of Yacolt depends on a system of drywells, catchbasins, and roadside ditches to channel and eliminate excess storm water. Figure 5 shows the locations of 11 drywells and 13 catch basins within the Town of Yacolt. Locations of drywells and catchbasins are based on the *1993 Wellhead Protection Plan for the Town of Yacolt.*

Four drywells lie within the one-year capture zone for Wells 404 - 407, three lie within the five-year capture zone for Wells 404 - 407, and one lies within the one-year capture zone for Well 403 (Figure 5). One catchbasin lies within the one-year capture zone for Wells 404 - 407, six lie within the five-year capture zone for Wells 404 - 407, and none lie within the one- or five-year capture zones for Well 403 (Figure 5).

### 5.2.3 ON-SITE SEPTIC SYSTEMS

#### 5.2.3.1 Potential Risks

On-site septic systems pose a risk to groundwater where they are relatively high in density and/or where hazardous wastes are discharged to them. Potential contaminants from septic systems include pathogenic organisms (bacteria and parasites), nitrogen compounds, and toxic substances.

The extent to which pathogens are transported in the subsurface away from a septic drainfield depends on the type of pathogen and the chemical and physical conditions in the subsurface. In general, if a septic system is properly sited, constructed, and maintained, the transport of microorganisms will be limited. Household hazardous chemicals such as cleaners, polishes, waxes, and paints can be transported to groundwater via a septic system. Some products contain toxic and persistent chemicals that can cause low-level contamination when coupled with a high density of septic systems. Homeowners can improperly dispose of chemicals because they do not understand the threat they pose to groundwater quality. Business and commercial facilities that rely on septic systems need to take special precautions to avoid contamination of their wastewater.

Ammonia and nitrate are highly soluble in water and can be expected in detectable quantities wherever portions of an aquifer are affected by septic system discharges. Nitrate is regulated,

since ingestion can result in methemoglobinemia, or "blue baby" syndrome. As discussed in Section 3, the natural background concentration for nitrate is 0.5 mg-N/L, and the calculated enforcement limit is 4.27 mg-N/l. The MCL for nitrate is 10 mg-N/L.

#### 5.2.3.2 Occurrence in the Yacolt Valley

There are 395 on-site septic systems within the corporate limits of Yacolt, according to the Clark County Health Department (formerly the SW Washington Health District), and there are at least two cesspools (septic tanks) that discharge directly to drywells (pers. Comm. Rod Orlando, email 4/24/3003). As discussed in Section 3, the statistically representative concentration of nitrate is 3.64 mg-N/l for wells representing existing water quality within the Town.

### 5.2.4 PARKS, AGRICULTURE, AND ANIMAL HUSBANDRY

Parks, agriculture, and animal husbandry can provide nitrogen to the groundwater in the form of fertilizers and livestock manure. They can also be sources of pesticides and herbicides such as EDB, DBCP, and dicamba. None of these land uses are a significant concern in the Town of Yacolt.

Wells 404 – 407 occur within the City's ballfield park. Some small-scale farming and animal husbandry occurs in the southern part of the Yacolt Valley, but outside the vicinity of the capture zones for the Town water supply wells.

### 5.2.5 TRANSPORTATION SPILLS

Vehicles transporting hazardous material can be a source of groundwater contamination through accidents and resultant chemical spills. Hazardous materials are transported along many of the state highway systems on a daily basis. The most significant arterials in the Town of Yacolt include (Figure 5):

- NE Amboy Ave
- NE Railroad Ave.
- NE Yacolt Rd.

All three of these roads pass through the wellhead protection capture zones for wells 404 – 407. Yacolt Rd passes through the northern edge of the capture zone for Well 403.

A major spill along these roads within the capture zones could adversely impact of the underlying groundwater. However, none of these roads are major transportation corridors, and therefore the risk is not considered significant.

A railroad spur passes through the capture zone for wells 404, 405, and 406 (Figure 1), but the railroad is not being used and therefore does not represent a potential threat from transportation spills.

## 5.3 WELL SUSCEPTIBILITY AND VULNERABILITY

All the water supply wells for the Town of Yacolt are susceptible to contamination from land use activities because they are shallow, completed in an unconfined aquifer, and there is no substan-

tial fine-grained unit that occurs between land surface and the water table. The vulnerability of a well is based on its susceptibility and the magnitude of the contamination threat.

Well 403 is considered to have low vulnerability because the only contaminant threats are septic systems and two drywells in the wellhead protection area capture zone. One of the drywells is located within the 1-year capture zone, relatively close to Well 403.

Wells 404 – 407 are considered to have low to moderate vulnerability because the contaminant threats within the wellhead protection capture zones are from dry wells, USTs, storm water basins, and transportation corridors. There are four drywells, and one UST located within the one-year capture zone.

# 6 WATER RESOURCE PROTECTION STRATEGIES

## 6.1 MONITORING

CPU recently acquired the responsibility for water supply and wastewater management in the Town of Yacolt and has initiated water level and water quality monitoring in Yacolt's water supply wells. CPU is committed to managing water resources in the watershed for conservation, sustainability, and enhancement. CPU has a strong interest in understanding the potential influence of groundwater withdrawals on surface water and the effects of wastewater disposal in Yacolt.

CPU recently prepared a monitoring plan for the East Fork Lewis River watershed (PGG, 2003). The strategies for monitoring in this section are summarized from that plan.

### 6.1.1 WATER QUALITY

The East Fork Lewis River monitoring plan includes water quality monitoring of the Town's water supply wells and three existing monitoring wells. One monitoring well is located in the Cedar Creek groundwater basin (within the one year capture zone for Wells 404 – 407); another monitoring well is located approximately on the groundwater divide; and another one is in the Yacolt Creek groundwater basin. Monitoring is scheduled to begin in Summer 2003.

Water quality samples will be collected on a bimonthly basis. Samples will be analyzed for pH, conductivity, and temperature, chloride, nitrate, and alkalinity.

Results of groundwater quality monitoring will provide data to evaluate the effects of land use activities on groundwater quality. The suite of parameters is designed primarily to identify impact from on-site septic systems; however, they might provide some information on impact from dry wells. The data will also provide a benchmark for measuring the effectiveness of future enhancement projects and best management practices (BMPs).

### 6.1.2 WATER LEVELS

CPU will measure groundwater level at the production wells and monitoring wells on a monthly basis.

## 6.2 SEPTIC SYSTEM MAINTENANCE

CPU recently acquired the responsibility for wastewater management in the Town of Yacolt (currently served by on-site septic systems). CPU will conduct and inventory all the septic systems and implement a septic system maintenance plan that will include incentives.

## 6.3 PUBLIC EDUCATION

Public education and technical assistance strategies are required to teach local residents and businesses about practices that could impact the quality of groundwater. These strategies include the following:

- Developing educational materials that can be distributed to CPU customers to teach them how they can help protect groundwater. The Annual Water Quality Report can be used to inform customers about topics such as the location of wellhead protection capture zone boundaries and the importance of the proper use and disposal of lawn chemicals, household wastes, and other potential contaminants.

- Notifying all business that store and handle wastes within the designated wellhead protection capture zone boundaries about the importance of proper waste handling and disposal. The availability of technical assistance and audits should be increased for small businesses within designated WHPAs.

- Developing school programs to educate youth on groundwater protection

- Placing "wellhead Protection Area" signs at the WHPA boundaries along transportation corridors

### 6.3.1 TURF MANAGEMENT

Best management practices regarding the use of pesticide, herbicide, fertilizer, and other agricultural chemical application within the wellhead protection capture zone boundaries should be established. These BMPs should recommend using slow-release fertilizers and non-synthetic pest management strategies.

Use of these BMPs should be required as part of the turf management practices at the Town ball field. Public education programs should be implemented that encourage homeowners, business owners, and hobby farmers to use BMPs.

## 7 REFERENCES


AGI, 1992. Delineation of Wellhead Protection Area, EPA Demonstration Project, Yacolt, Washington. March 16, 1992.

Clark County Neighbors (CCN), 1993. Wellhead Protection Plan for the Town of Yacolt, Washington. A demonstration project funded by the US Environmental Protection Agency. July 7,1993.

Hart Crowser, 1996. Yacolt Hydrogeologic Study, Yacolt, Washington. Prepared for the Town of Yacolt. January 4. 1996 J-4234

Odell, 2003. Clark Public Utilities Water System Plan Amendment For the Yacolt Water System. Prepared for Clark Public Utilities, February 2003

Orlando, Rod. Personal communication by email 4/24/3003 to Laura Strauss, Pacific Groundwater Group

Pacific Groundwater Group (PGG), 2003. Monitoring Plan for the East Fork Lewis River Watershed, Clark Public Utilities. Prepared for Clark Public Utilities, December 2002.

U.S. Environmental Protection Agency, 1991. A Modular Semi-Analytical Model for the Delineation of Wellhead Protection Areas, March 1991.

Washington State Department of Health (DOH), 1993. Washington State Wellhead Protection Program. December 1993.

Waterloo Hydrogeologic Software, 1992. FLOWPATH version5. Steady-State Two-Dimensional Horizontal Aquifer Simulation Model. Waterloo, Ontario, Canada.

Washington Department of Ecology (WDOE), 1992. Sormwater Management Manual for the Puget Sound. Washingon Department of Ecology. Olympia, Washington.

_____, 1995. WAC 173-200, Water Quality Standards for Ground Waters of the State of Washington.

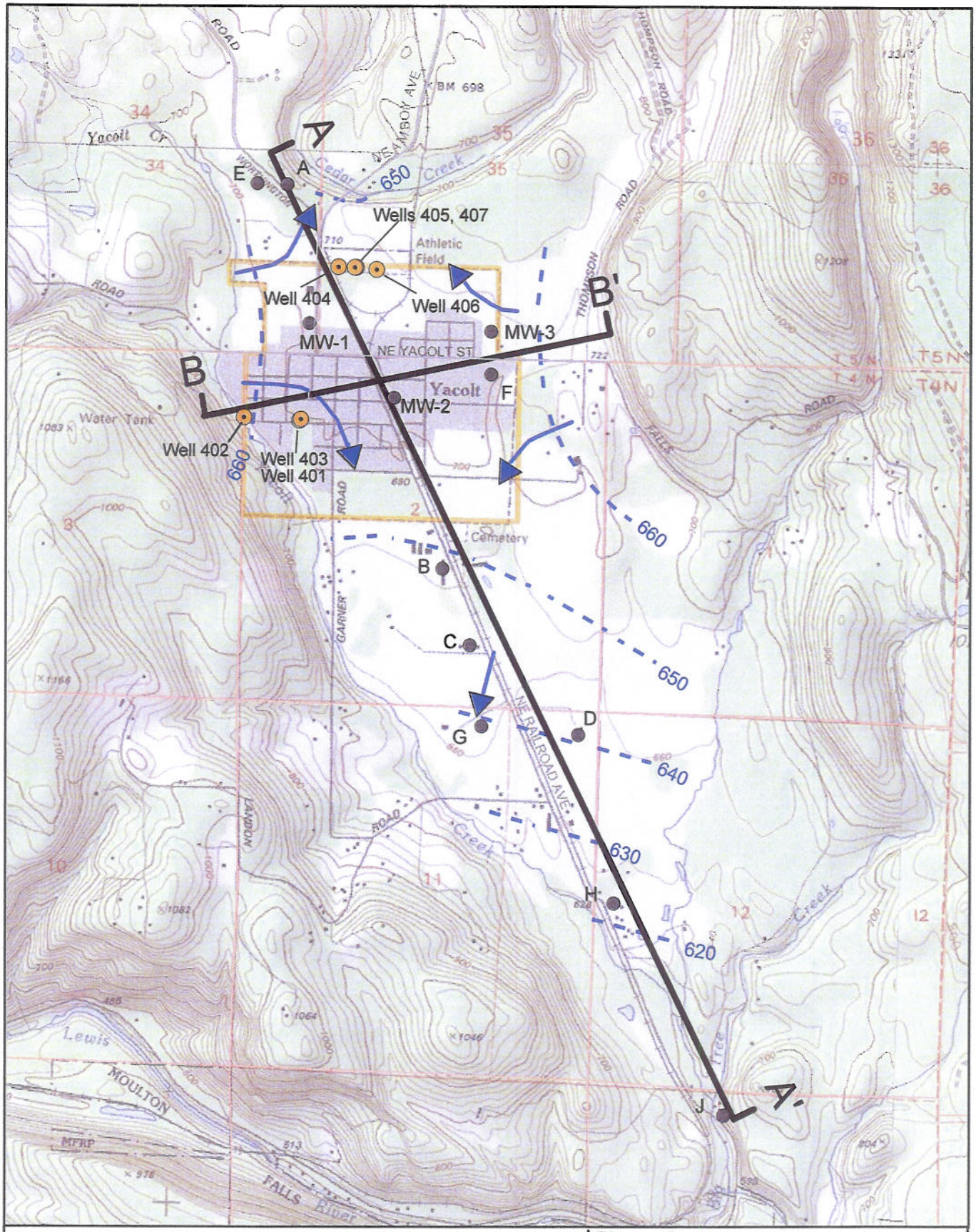


Supply Well
Other Wells Used for Cross-Sections
Cross-Section Alignment
July Water Level Contours (ft)
Groundwater Flow Direction

Sections
City Limit

0 1,000 2,000 Feet
1:24,000

Figure 1
Vicinity Map with Well Locations, Cross-Section Alignments, and July Water Level Contours

PgG

K:\DANIJM890537\GIS\yacolt.mxd, 5/13/03

# Figure 2

## Generalized Subsurface Cross Section A-A'

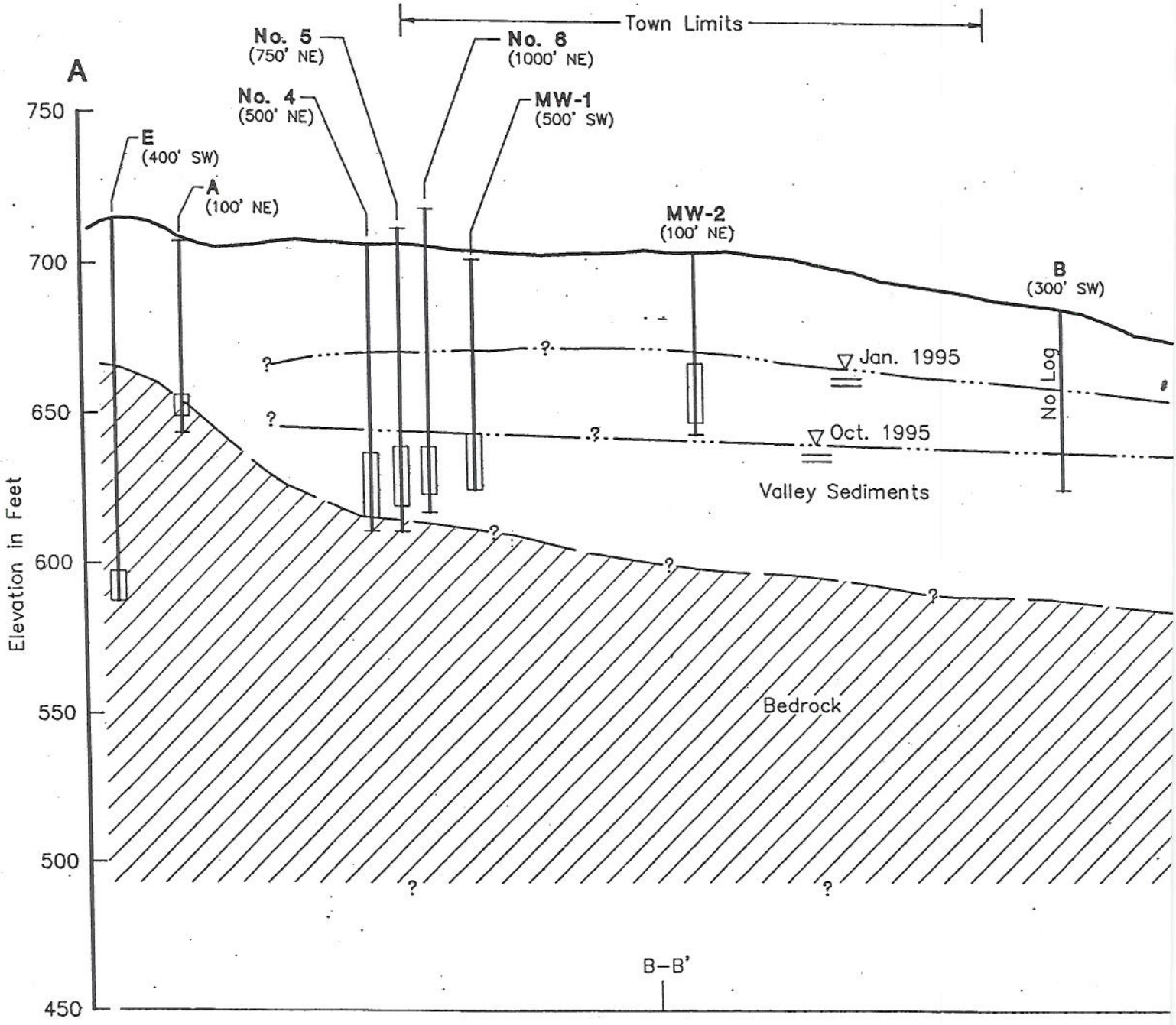


MW-2 (100' NE) — Well Number, Offet Distance and Direction

Well Location

Screened/Perforated Interval

B–B'

cvd 1/4/96 ' 1=1000 HC.pcp
42340003

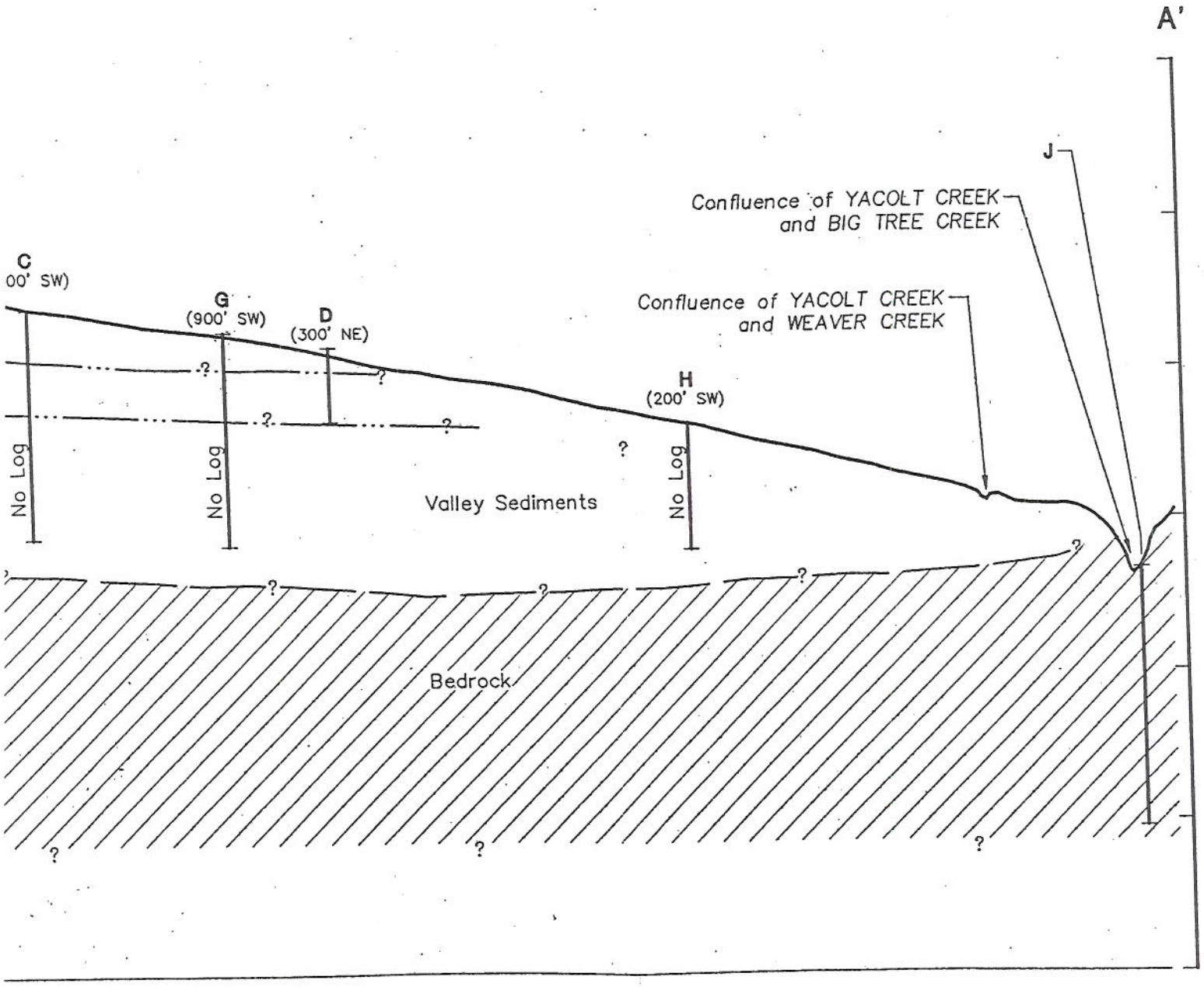


Water Table

Cross Section Intersection

Horizontal Scale in Feet
0 1000 2000
0 50 100
Vertical Scale in Feet
Vertical Exaggeration x 20

HARTCROWSER
J-4234 1/96
Figure 3

# Figure 3
## Generalized Subsurface Cross Section B-B'

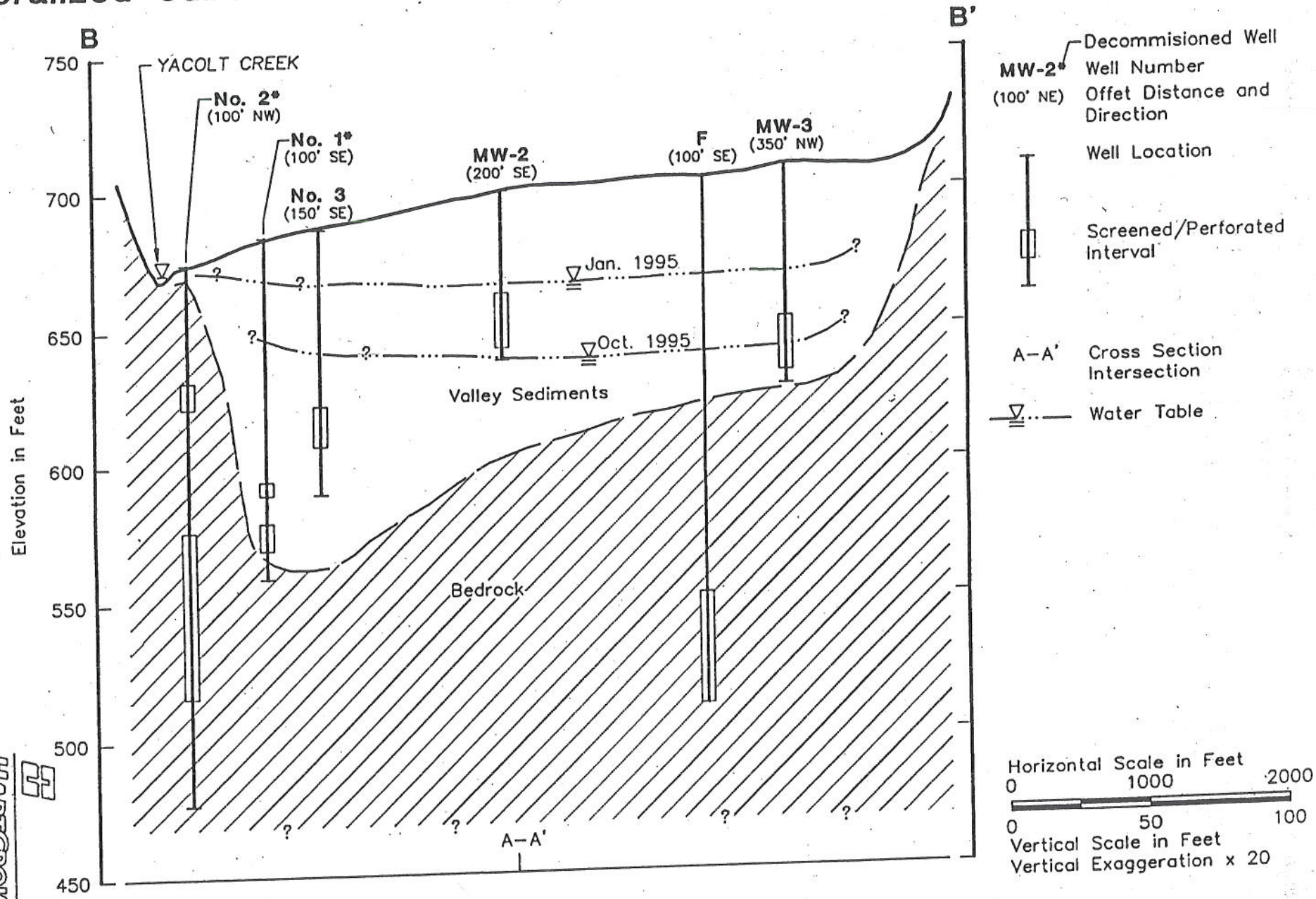


HARTCROWSER
J-4234
1/96
Figure 4

# Figure 4 - Water Level Trends for Yacolt Supply Wells

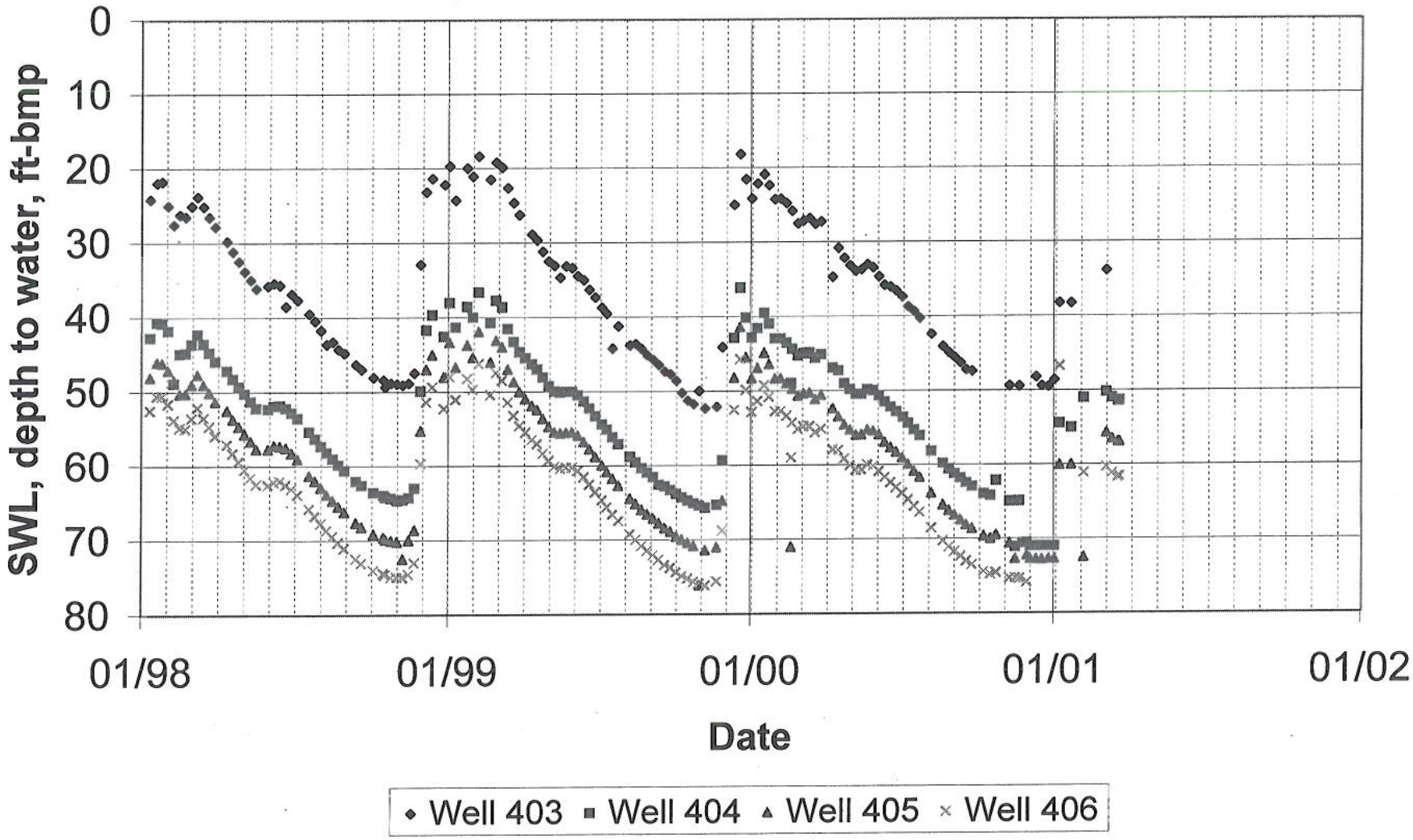

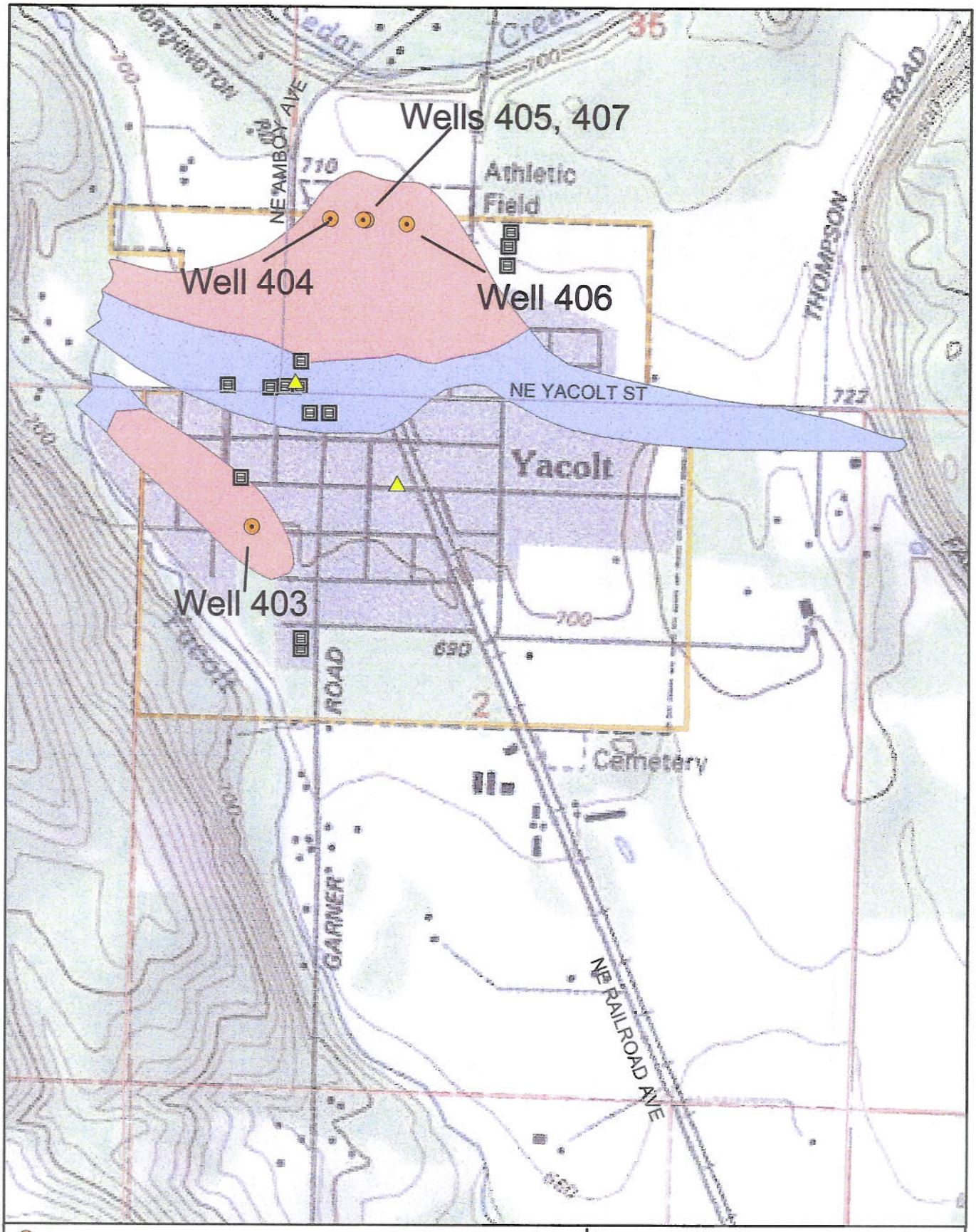


Supply Well
Stormwater Catchbasin
Underground Storage Tank
Sections
City Limit

1 Year Capture Zone
5 Year Capture Zone

0 500 1,000 Feet
1:12,000

Figure 5
Capture Zones and Environmental Sites

PgG

K:\DANUM890537\GIS\yacolt.mxd, 5/13/03

# Appendix H

## Discharge Calculations

# Surface Water Discharge
# Mixed Water - Water Quality Parameters

| | | Dollars Corner | | MBR | Mixed Waters |
|---|---|---|---|---|---|
| | | max | avg | Effluent | |
| NO2_NO3 | mg/l | 0.72 | 0.279741516 | *1.25* | 0.73 |
| Flow | CFS | | 28.33 | 0.56 | 5.87 |
| pH | | 8.60 | 7.44 | *7.20* | 8.08 |
| Temp oC | oC | 26.4 | 11.35 | *25.00* | 26.27 |
| TN | mg/L | *1.02* | *0.30* | <3.0 | 1.07 |
| | mg/l | | | | |

**Estimates*

**T°C**

WWTP Effluent
0.56 CFS
25.00 oC

Criteria
**16** **(Range = 16-17.5oC)**

Dollars Corner
5.31 CFS
26.4 oC

~at chronic mixing zone
5.87 CFS
26.27 oC

**Additional data from actual discharge site and further analysis will be performed, as part of the facility plan**

**pH**

WWTP Effluent
0.56 CFS
7.20

Criteria
**8.5** **(Range = 6.5 - 8.5)**

Dollars Corner
5.31 CFS
8.60

~at chronic mixing zone
5.87 CFS
8.08

**MEETS LIMITS!**

**NO2_NO3 mg/l**

WWTP Effluent
0.56 CFS
1.25 mg/L

Criteria
**<** 10.00 mg/L
(human health criteria)

Dollars Corner
21.25 CFS
0.72 mg/L

Mixed Waters
21.81 CFS
0.734 mg/L

**MEETS LIMITS!**

**TN mg/L**

WWTP Effluent
0.56 CFS
3.00 mg/L

Criteria
**Chronic** *10.50 mg/L*

Dollars Corner
21.25 CFS
1.02 mg/L

Mixed Waters
21.81 CFS
1.07 mg/L

**MEETS LIMITS!**

Biolac - chronic - year round

| | | Dollars Corner | | Biolac | Mixed Waters |
|---|---|---|---|---|---|
| | | max | avg | Effluent | |
| NO2_NO3 | mg/l | 0.72 | 0.28 | *4.5* | 0.82 |
| Flow | CFS | | 28.33 | 0.56 | 5.87 |
| pH | | 8.60 | 7.44 | *7.20* | 8.08 |
| Temp oC | oC | 26.4 | 11.35 | *25.00* | 26.27 |
| TN | mg/L | *1.02* | *0.30* | <10.0 | 1.25 |
| | mg/l | | | | |

**Estimates*

**T°C**

WWTP Effluent
0.56 CFS
25.00 oC

**Criteria**
**16** **(Range = 16-17.5oC)**

Dollars Corner
5.31 CFS
26.40 oC

5.87 CFS
26.27 oC

~at chronic mixing zone

**Additional data from actual discharge site and further analysis will be performed, as part of the facility plan**

Additional data from the actual discharge site and further analysis will be perfor

**pH**

WWTP Effluent
0.56 CFS
7.20

**Criteria**
**8.5** **(Range = 6.5 - 8.5)**

Dollars Corner
5.31 CFS
8.60

5.87 CFS
8.08

~at chronic mixing zone

**MEETS LIMITS!**

**NO2_NO3 mg/l**

WWTP Effluent
0.56 CFS
4.50 mg/L

**Criteria**
**<** 10.00 mg/L
(human health criteria)

Dollars Corner
21.25 CFS
0.72 mg/L

21.81 CFS
0.817 mg/L

Mixed Waters

**MEETS LIMITS!**

**TN mg/L**

WWTP Effluent
0.56 CFS
10.00 mg/L

**Criteria**
**Chronic** *10.50 mg/L*

Dollars Corner
21.25 CFS
1.02 mg/L

21.81 CFS
1.25 mg/L

Mixed Waters

**MEETS LIMITS!**

MBR- acute-year round

| | | Dollars Corner | | MBR | Mixed Waters |
|---|---|---|---|---|---|
| | | max | avg | Effluent | |
| NO2_NO3 | mg/l | 0.72 | 0.279741516 | *1.25* | #REF! |
| Flow | CFS | | 25.50 | 0.93 | 1.41 |
| pH | | 8.60 | 7.44 | *7.20* | 7.37 |
| Temp oC | oC | 26.4 | 11.35 | *25.00* | 25.47 |
| TN | mg/L | *1.02* | *0.30* | <3.0 | #REF! |
| | mg/l | | | | |

**Estimates*

**T°C**

WWTP Effluent
0.93 CFS
25.00 oC

**Acute Criteria**
**33 oC**

Dollars Corner
0.48 CFS
26.40 oC

~at acute mixing zone
1.41 CFS
25.47 oC
**MEETS LIMITS!**

**For estimating criteria for NH3 and unionized NH3**

**pH**

WWTP Effluent
0.93 CFS
7.20

**Criteria**
**8.5** **(Range = 6.5 - 8.5)**

Dollars Corner
0.48 CFS
8.60

~at acute mixing zone
1.41 CFS
7.37
**MEETS LIMITS!**

Biolac - acute -year round

| | | Dollar Corner | | Biolac | Mixed |
|---|---|---|---|---|---|
| | | max | avg | Effluent | Condition |
| NO2_NO3 | mg/l | 0.72 | 0.279741516 | *4.5* | #REF! |
| Flow | CFS | | 25.50 | 0.93 | 1.41 |
| pH | | 8.60 | 7.44 | *7.20* | 7.37 |
| Temp oC | oC | 26.4 | 11.35 | *25.00* | 25.47 |
| TN | mg/L | *1.02* | *0.30* | <10.0 | #REF! |
| | mg/l | | | | |

**Estimates*

**T°C**

WWTP Effluent
0.93 CFS
25.00 oC

**Criteria**
**33 oC**
**Acute**

Dollar Corner
0.48 CFS
26.40 oC

~at acute mixing zone
1.41 CFS
25.47 oC
**MEETS LIMITS!**

**pH**

WWTP Effluent
0.93 CFS
7.20

**Criteria**
**8.5** **(Range = 6.5 - 8.5)**

Dollar Corner
0.48 CFS
8.60

~at acute mixing zone
1.41 CFS
7.37
**MEETS LIMITS!**

MBR-chronic - wet weather

| | | Dollar Corner | | MBR | Mixed |
|---|---|---|---|---|---|
| | | max | avg | Effluent | Condition |
| NO2_NO3 | mg/l | 0.72 | 0.390460131 | *1.25* | 0.73 |
| Flow | CFS | | 57.19 | 0.75 | 11.47 |
| pH | | 8.6 | 7.34 | *7.20* | 8.19 |
| Temp oC | oC | 15.4 | 7.32 | *20.00* | 15.70 |
| TN | mg/L | *1.02* | *0.41* | <3.0 | 1.05 |
| | mg/l | | | | |

**Estimates*

**T°C**

WWTP Effluent
0.75 CFS
20.00 oC

Dollar Corner
10.72 CFS
15.40 oC

**Criteria**
**16** **(Range = 16-17.5oC)**

~at chronic mixing zone
11.47 CFS
15.70 oC
**MEETS LIMITS!**

**pH**

WWTP Effluent
0.75 CFS
7.20

Dollar Corner
10.72 CFS
8.60

**Criteria**
**8.5** **(Range = 6.5 - 8.5)**

~at chronic mixing zone
11.47 CFS
8.19
**MEETS LIMITS!**

**NO2_NO3 mg/l**

WWTP Effluent
0.75 CFS
1.25 mg/L

Dollar Corner
42.89 CFS
0.72 mg/L

**Criteria**
**<** 10.00 mg/L
(human health criteria)

Mixed Waters
43.64 CFS
0.729 mg/L
**MEETS LIMITS!**

**TN mg/L**

WWTP Effluent
0.75 CFS
3.00 mg/L

Dollar Corner
42.89 CFS
1.02 mg/L

**Criteria**
**Chronic** *10.82 mg/L*

Mixed Waters
43.64 CFS
1.05 mg/L
**MEETS LIMITS!**

Biolac - chronic - wet weather

| | | Dollar Corner | | Biolac | Fully Mixed |
|---|---|---|---|---|---|
| | | max | avg | Effluent | Condition |
| NO2_NO3 | mg/l | 0.72 | 0.39 | *4.5* | 0.78 |
| Flow | CFS | | 57.19 | 0.75 | 11.47 |
| pH | | 8.6 | 7.34 | *7.20* | 8.19 |
| Temp oC | oC | 15.4 | 7.32 | *20.00* | 15.70 |
| TN | mg/L | *1.02* | *0.41* | <10.0 | 1.17 |
| | mg/l | | | | |

**Estimates*

**T°C**

WWTP Effluent
0.75 CFS
20.00 oC

Dollar Corner
10.72 CFS
15.40 oC

**Criteria**
**16** **(Range = 16-17.5oC)**

~at chronic mixing zone
11.47 CFS
15.70 oC **MEETS LIMITS!**

**pH**

WWTP Effluent
0.75 CFS
7.20

Dollar Corner
10.72 CFS
8.60

**Criteria**
**8.5** **(Range = 6.5 - 8.5)**

~at chronic mixing zone
11.47 CFS
8.19 **MEETS LIMITS!**

**NO2_NO3 mg/l**

WWTP Effluent
0.75 CFS
4.50 mg/L

Dollar Corner
42.89 CFS
0.72 mg/L

**Criteria**
**<** 10.00 mg/L
(human health criteria)

Mixed Waters
43.64 CFS
0.785 mg/L **MEETS LIMITS!**

**TN mg/L**

WWTP Effluent
0.75 CFS
10.00 mg/L

Dollar Corner
42.89 CFS
1.02 mg/L

**Criteria**
**Chronic** *10.82 mg/L*

Mixed Waters
43.64 CFS
1.17 mg/L **MEETS LIMITS!**

MBR- acute -wet weather

| | | Dollars Corner | | MBR | Mixed |
|---|---|---|---|---|---|
| | | max | avg | Effluent | Condition |
| NO2_NO3 | mg/l | 0.72 | 0.390460131 | *1.25* | #REF! |
| Flow | CFS | | 38.50 | 0.93 | 1.66 |
| pH | | 8.6 | 7.34 | *7.20* | 7.44 |
| Temp oC | oC | 15.4 | 7.32 | *20.00* | 17.99 |
| TN | mg/L | *1.02* | *0.41* | <3.0 | #REF! |
| | mg/l | | | | |

**Estimates*

**T°C**

WWTP Effluent
0.93 CFS
20.00 oC

**Acute Criteria**
**33 oC**

Dollars Corner
0.72 CFS
15.40 oC

~at acute mixing zone
1.66 CFS
17.99 oC **MEETS LIMITS!**

**pH**

WWTP Effluent
0.93 CFS
7.20

**Acute Criteria**
**8.5** **(Range = 6.5 - 8.5)**

Dollars Corner
0.72 CFS
8.60

~at acute mixing zone
1.66 CFS
7.44 **MEETS LIMITS!**

Biolac - acute - wet weather

| | | Dollar Corner | | Biolac | Mixed |
|---|---|---|---|---|---|
| | | max | avg | Effluent | Condition |
| NO2_NO3 | mg/l | 0.72 | 0.390460131 | *4.5* | 0.76 |
| Flow | CFS | | 38.50 | 0.93 | 1.66 |
| pH | | 8.6 | 7.34 | *7.20* | 7.44 |
| Temp oC | oC | 15.4 | 7.32 | *20.00* | 17.99 |
| TN | mg/L | *1.02* | *0.41* | <10.0 | 1.23 |
| | mg/l | | | | |

**Estimates*

**T°C**

WWTP Effluent
0.93 CFS
20.00 oC

**Acute Criteria**
**33 oC**

Dollar Corner
0.72 CFS
15.40 oC

~at acute mixing zone
1.66 CFS
17.99 oC
**MEETS LIMITS!**

**pH**

WWTP Effluent
0.93 CFS
7.20

**Acute Criteria**
**8.5** **(Range = 6.5 - 8.5)**

Dollar Corner
0.72 CFS
8.60

~at acute mixing zone
1.66 CFS
7.44
**MEETS LIMITS!**

## Yacolt - General Sewer Plan
## Surface Water Discharge - Mixed Waters - Water Quality Parameters
## (Ammonia and Unionizied Ammonia) Biolac and MBR

| | Summer | | Winter | | Year Round | |
|---|---|---|---|---|---|---|
| | **Acute** 1Q10 | **Chronic** 7Q10 | **Acute** 1Q10 | **Chronic** 7Q10 | **Acute** 1Q10 | **Chronic** 7Q10 |
| Mixing Ratio | 0.9:1 | 14:1 | 0.8:1 | 11:1 | 0.9:1 | 14:1 |
| Dilution Factor | 1.9 | 15.1 | 1.8 | 12.5 | 1.9 | 15.1 |
| | | | | | | |
| Dollar Corner pH (max) | 8.5 | | 8.6 | | 8.6 | |
| Dollar Corner Temperature (max) | 26.4 | | 15.4 | | 26.4 | |
| Dollar Corner NH4-N | 0.08 | | 0.07 | | 0.08 | |
| Effluent pH | 7.2 | | 7.2 | | 7.2 | |
| Effluent Temperature | 25 | | 20 | | 25 | |
| Effluent NH4-N | 1 | | 1 | | 1 | |
| | | | | | | |
| pH at Acute Mixing Zone (from Ecology Spreadsheet) | 7.5 | | 7.5 | | 7.5 | |
| Temperature at Acute Mixing Zone | 25.7 | | 18.0 | | 25.7 | |
| Ammonia (NH4) at Acute Mixing Zone | *0.57* | | *0.59* | | *0.57* | |
| Unionized Ammonia (NH3) at Acute Mixing Zone | *0.0105* | | *0.0063* | | *0.0105* | |
| | | | | | | |
| pH at Chronic Mixing Zone (from Ecology Spreadsheet) | | 8.1 | | 8.2 | | 8.2 |
| Temperature at Chronic Mixing Zone | | 26.3 | | 15.8 | | 26.3 |
| Ammonia (NH4) at Chronic Mixing Zone | | *0.14* | | *0.14* | | *0.14* |
| Unionized Ammonia (NH3) at Chronic Mixing Zone | | *0.011* | | *0.006* | | *0.013* |
| Total Ammonia Criteria (from Ecology Spreadsheet) | **13.3** | **0.43** | **13.3** | **2.02** | **13.3** | **0.39** |
| Unionized Ammonia (NH3) Criteria from Ecology Speadsheet) | **0.319** | **0.042** | **0.172** | **0.022** | **0.298** | **0.042** |
| Meets both NH3 and NH4 Criteria? | Yes | Yes | Yes | Yes | Yes | Yes |

**Note:**
*Italic = Final concentrations used for comparison to standards*
**Bold = Standards used for comparisons**

## Yacolt - General Sewer Plan
## Surface Water Discharge - Mixed Waters - Water Quality Parameters (Phosphorus Maximum) Biolac

| | Summer | | Winter | | Year Round | |
|---|---|---|---|---|---|---|
| | **Acute** 1Q10 | **Chronic** 7Q10 | **Acute** 1Q10 | **Chronic** 7Q10 | **Acute** 1Q10 | **Chronic** 7Q10 |
| Dollar Corner Flow (CFS) | 26 | 28 | 39 | 57 | 26 | 28 |
| Adjusted Flow at discharge (75%) (CFS) | 19.5 | 21.0 | 29.3 | 42.8 | 19.5 | 21.0 |
| Acute Allowed Flow (2.5%)(CFS) | 0.5 | -- | 0.7 | -- | 0.5 | -- |
| Chronic Allowed Flow (25%)(CFS) | -- | 5.3 | -- | 10.7 | -- | 5.3 |
| Effluent Flow (CFS) | 0.56 | 0.37 | 0.93 | 0.93 | 0.56 | 0.37 |
| Mixing Ratio | 0.9:1 | 14:1 | 0.8:1 | 11:1 | 0.9:1 | 14:1 |
| Dilution Factor | 1.9 | 15.1 | 1.8 | 12.5 | 1.9 | 15.1 |
| | | | | | | |
| Dollar Corner Total P MAX | 0.14 | 0.14 | 0.14 | 0.14 | 0.14 | 0.14 |
| | | | | | | |
| Effluent Total P | 0.1 | 0.1 | 0.1 | 0.1 | 0.1 | 0.1 |
| | | | | | | |
| Total P at Acute Mixing Zone | 0.12 | | 0.12 | | 0.12 | |
| Total P at Chronic Mixing Zone | | 0.14 | | 0.14 | | 0.14 |
| Total P fully Mixed | *0.14* | *0.14* | *0.14* | *0.14* | *0.14* | *0.14* |
| | | | | | | |
| Total P criteria lowest estimate | **0.1** | **0.1** | **0.1** | **0.1** | **0.1** | **0.1** |
| Meets Criteria? | No | No | No | No | No | No |

**Note:**
*Italic = Final concentrations used for comparison to standards*
**Bold = Standards used for comparisons**

## Yacolt - General Sewer Plan
## Surface Water Discharge - Mixed Waters - Water Quality Parameters (Phosphorus Average) Biolac

| | Summer | | Winter | | Year Round | |
|---|---|---|---|---|---|---|
| | **Acute** | **Chronic** | **Acute** | **Chronic** | **Acute** | **Chronic** |
| | 1Q10 | 7Q10 | 1Q10 | 7Q10 | 1Q10 | 7Q10 |
| Dollar Corner Flow (CFS) | 26 | 28 | 39 | 57 | 26 | 28 |
| Adjusted Flow at discharge (75%) (CFS) | 19.5 | 21.0 | 29.3 | 42.8 | 19.5 | 21.0 |
| Acute Allowed Flow (2.5%)(CFS) | 0.5 | -- | 0.7 | -- | 0.5 | -- |
| Chronic Allowed Flow (25%)(CFS) | -- | 5.3 | -- | 10.7 | -- | 5.3 |
| Effluent Flow (CFS) | 0.56 | 0.37 | 0.93 | 0.93 | 0.56 | 0.37 |
| Mixing Ratio | 0.9:1 | 14:1 | 0.8:1 | 11:1 | 0.9:1 | 14:1 |
| Dilution Factor | 1.9 | 15.1 | 1.8 | 12.5 | 1.9 | 15.1 |
| | | | | | | |
| Dollar Corner Total P Average | 0.016 | 0.02 | 0.02 | 0.02 | 0.018 | 0.018 |
| | | | | | | |
| Effluent Total P | 0.1 | 0.1 | 0.1 | 0.1 | 0.1 | 0.1 |
| | | | | | | |
| Total P at Acute Mixing Zone | 0.06 | | 0.06 | | 0.06 | |
| Total P at Chronic Mixing Zone | | 0.02 | | 0.03 | | 0.02 |
| Total P Fully Mixed | *0.02* | *0.02* | *0.02* | *0.02* | *0.02* | *0.02* |
| Total P criteria lowest estimate | **0.1** | **0.1** | **0.1** | **0.1** | **0.1** | **0.1** |
| | Yes | Yes | Yes | Yes | Yes | Yes |

**Note:**
*Italic = Final concentrations used for comparison to standards*
**Bold = Standards used for comparisons**

## Yacolt - General Sewer Plan
## Surface Water Discharge - Mixed Waters - Water Quality Parameters (Phosphorus Maximum) MBR

| | Summer | | Winter | | Year Round | |
|---|---|---|---|---|---|---|
| | **Acute** | **Chronic** | **Acute** | **Chronic** | **Acute** | **Chronic** |
| | 1Q10 | 7Q10 | 1Q10 | 7Q10 | 1Q10 | 7Q10 |
| Dollar Corner Flow (CFS) | 26 | 28 | 39 | 57 | 26 | 28 |
| Adjusted Flow at discharge (75%) (CFS) | 19.5 | 21.0 | 29.3 | 42.8 | 19.5 | 21.0 |
| Acute Allowed Flow (2.5%)(CFS) | 0.5 | -- | 0.7 | -- | 0.5 | -- |
| Chronic Allowed Flow (25%)(CFS) | -- | 5.3 | -- | 10.7 | -- | 5.3 |
| Effluent Flow (CFS) | 0.56 | 0.37 | 0.93 | 0.93 | 0.56 | 0.37 |
| Mixing Ratio | 0.9:1 | 14:1 | 0.8:1 | 11:1 | 0.9:1 | 14:1 |
| Dilution Factor | 1.9 | 15.1 | 1.8 | 12.5 | 1.9 | 15.1 |
| | | | | | | |
| Dollar Corner Total P MAX | 0.14 | 0.14 | 0.14 | 0.14 | 0.14 | 0.14 |
| | | | | | | |
| Effluent Total P | 0.5 | 0.5 | 0.5 | 0.5 | 0.5 | 0.5 |
| | | | | | | |
| Total P at Acute Mixing Zone | 0.33 | | 0.34 | | 0.33 | |
| Total P at Chronic Mixing Zone | | 0.16 | | 0.17 | | 0.16 |
| Total P fully Mixed | *0.15* | *0.15* | *0.15* | *0.15* | *0.15* | *0.15* |
| Total P criteria lowest estimate | **0.1** | **0.1** | **0.1** | **0.1** | **0.1** | **0.1** |
| | No | No | No | No | No | No |

**Note:**
*Italic = Final concentrations used for comparison to standards*
**Bold = Standards used for comparisons**

## Yacolt - General Sewer Plan
## Surface Water Discharge - Mixed Waters - Water Quality Parameters (Phosphorus Average) MBR

| | Summer | | Winter | | Year Round | |
|---|---|---|---|---|---|---|
| | **Acute** 1Q10 | **Chronic** 7Q10 | **Acute** 1Q10 | **Chronic** 7Q10 | **Acute** 1Q10 | **Chronic** 7Q10 |
| Dollar Corner Flow (CFS) | 26 | 28 | 39 | 57 | 26 | 28 |
| Adjusted Flow at discharge (75%) (CFS) | 19.5 | 21.0 | 29.3 | 42.8 | 19.5 | 21.0 |
| Acute Allowed Flow (2.5%)(CFS) | 0.5 | -- | 0.7 | -- | 0.5 | -- |
| Chronic Allowed Flow (25%)(CFS) | -- | 5.3 | -- | 10.7 | -- | 5.3 |
| Effluent Flow (CFS) | 0.56 | 0.37 | 0.93 | 0.93 | 0.56 | 0.37 |
| Mixing Ratio | 0.9:1 | 14:1 | 0.8:1 | 11:1 | 0.9:1 | 14:1 |
| Dilution Factor | 1.9 | 15.1 | 1.8 | 12.5 | 1.9 | 15.1 |
| | | | | | | |
| Dollar Corner Total P Average | 0.016 | 0.02 | 0.02 | 0.02 | 0.018 | 0.018 |
| | | | | | | |
| Effluent Total P | 0.5 | 0.5 | 0.5 | 0.5 | 0.5 | 0.5 |
| | | | | | | |
| Total P at Acute Mixing Zone | 0.27 | | 0.29 | | 0.28 | |
| Total P at Chronic Mixing Zone | | 0.05 | | 0.06 | | 0.05 |
| Total P Fully Mixed | *0.03* | *0.03* | *0.03* | *0.03* | *0.03* | *0.03* |
| Total P criteria lowest estimate | **0.1** | **0.1** | **0.1** | **0.1** | **0.1** | **0.1** |
| | Yes | Yes | Yes | Yes | Yes | Yes |

**Note:**
*Italic = Final concentrations used for comparison to standards*
**Bold = Standards used for comparisons**

# Yacolt - General Sewer Plan
# Surface Water Discharge - Mixing Ratios

| Aquatic Criteria Dilution Factors | Year Round | | Winter | |
|---|---|---|---|---|
| | 1Q10 | 7Q10 | 1Q10 | 7Q10 |
| Dollar Corner Flow (CFS) | 26 | 28 | 39 | 57 |
| Adjusted Flow at discharge (75%) (CFS) | 19.5 | 21.0 | 29.3 | 42.8 |
| Acute Allowed Flow (2.5%)(CFS) | 0.5 | -- | 0.7 | -- |
| Chronic Allowed Flow (25%)(CFS) | -- | 5.3 | -- | 10.7 |
| Effluent Flow (CFS) | 0.56 | 0.37 | 0.93 | 0.93 |
| Mixing Ratio | 0.9:1 | 14:1 | 0.8:1 | 11:1 |
| Dilution Factor | 1.9 | 15.1 | 1.8 | 12.5 |

| Human Health Dilution Factors | Year Round | Winter |
|---|---|---|
| Average Dollar Corner Flow | 743 | 1120 |
| Adjustment for Discharge Percent | 75 | 75 |
| Adusted Flow | 557 | 840 |
| Effluent Flow | 0.3 | 0.33 |
| Dilution Factor | 1859 | 2546 |

# Surface Water Discharge:
# Example of FRESH WATER CRITERIA Calculation for Ammonia-N and Unionized Ammonia

Chapter 173-201A WAC

(Amended November 20, 2006)

Freshwater un-ionized ammonia criteria based on Chapter 173-201A WAC
Amended November 20, 2006

| INPUT | |
|---|---|
| 1. Temperature (deg C): | 26.4 |
| 2. pH: | 8.39 |
| 3. Is salmonid habitat an existing or designated use? | Yes |
| 4. Are non-salmonid early life stages present or absent? | Present |

| OUTPUT | |
|---|---|
| 1. Unionized ammonia NH3 criteria (mgNH3/L) | |
| Acute: | 0.428 |
| Chronic: | 0.042 |
| 2. Total ammonia nitrogen criteria (mgN/L): | |
| Acute: | 2.644 |
| Chronic: | 0.261 |

# Surface Water Discharge: Streeter Phelps Model for Year-Round Dissolved Oxygen

Streeter-Phelps analysis of critical dissolved oxygen sag.

Based on Lotus File DOSAG2.WK1 Revised 19-Oct-93

## INPUT

| | |
|---|---|
| 1. EFFLUENT CHARACTERISTICS | Biolac |
| Discharge (cfs): | 0.56 |
| CBOD5 (mg/L): | 3 |
| NBOD (mg/L): | 3 |
| Dissolved Oxygen (mg/L): | 0 |
| Temperature (deg C): | 25 |
| 2. RECEIVING WATER CHARACTERISTICS | |
| Upstream Discharge (cfs): | 21.23 |
| Upstream CBOD5 (mg/L): | 1.0 |
| Upstream NBOD (mg/L): | 0.1 |
| Upstream Dissolved Oxygen (mg/L): | 7.68 |
| Upstream Temperature (deg C): | 26.4 |
| Elevation (ft NGVD): | 68 |
| Downstream Average Channel Slope (ft/ft): | 0.00128 |
| Downstream Average Channel Depth (ft): | 5.5 |
| Downstream Average Channel Velocity (fps): | 0.26 |
| 3. REAERATION RATE (Base e) AT 20 deg C (day^-1): | 0.18 |

| Reference | Applic. Vel (fps) | Applic. Dep (ft) | Suggested Values |
|---|---|---|---|
| Churchill | 1.5 - 6 | 2 - 50 | 0.18 |
| O'Connor and Dobbins | .1 - 1.5 | 2 - 50 | 0.51 |
| Owens | .1 - 6 | 1 - 2 | 0.37 |
| Tsivoglou-Wallace | .1 - 6 | .1 - 2 | 1.36 |

| | |
|---|---|
| 4. BOD DECAY RATE (Base e) AT 20 deg C (day^-1): | 2.28 |

| Reference | Suggested Value |
|---|---|
| Wright and McDonnell, 1979 | 2.28 |

## OUTPUT

| | |
|---|---|
| 1. INITIAL MIXED RIVER CONDITION | |
| CBOD5 (mg/L): | 1.1 |
| NBOD (mg/L): | 0.2 |
| Dissolved Oxygen (mg/L): | 7.5 |
| Temperature (deg C): | 26.4 |
| 2. TEMPERATURE ADJUSTED RATE CONSTANTS (Base e) | |
| Reaeration (day^-1): | 0.21 |
| BOD Decay (day^-1): | 3.05 |
| 3. CALCULATED INITIAL ULTIMATE CBODU AND TOTAL BODU | |
| Initial Mixed CBODU (mg/L): | 1.5 |
| Initial Mixed Total BODU (CBODU + NBOD, mg/L): | 1.7 |
| 4. INITIAL DISSOLVED OXYGEN DEFICIT | |
| Saturation Dissolved Oxygen (mg/L): | 8.041 |
| Initial Deficit (mg/L): | 0.56 |
| 5. TRAVEL TIME TO CRITICAL DO CONCENTRATION (days): | 0.85 |
| 6. DISTANCE TO CRITICAL DO CONCENTRATION (miles): | 3.58 |
| 7. CRITICAL DO DEFICIT (mg/L): | 1.88 |
| 8. CRITICAL DO CONCENTRATION (mg/L): | 6.16 |

Streeter-Phelps analysis of critical dissolved oxygen sag.

Based on Lotus File DOSAG2.WK1 Revised 19-Oct-93

## INPUT

| | |
|---|---|
| 1. EFFLUENT CHARACTERISTICS | Biolac |
| Discharge (cfs): | 0.56 |
| CBOD5 (mg/L): | 10 |
| NBOD (mg/L): | 10 |
| Dissolved Oxygen (mg/L): | 0 |
| Temperature (deg C): | 25 |
| 2. RECEIVING WATER CHARACTERISTICS | |
| Upstream Discharge (cfs): | 21.23 |
| Upstream CBOD5 (mg/L): | 1.0 |
| Upstream NBOD (mg/L): | 0.1 |
| Upstream Dissolved Oxygen (mg/L): | 7.68 |
| Upstream Temperature (deg C): | 26.4 |
| Elevation (ft NGVD): | 68 |
| Downstream Average Channel Slope (ft/ft): | 0.00128 |
| Downstream Average Channel Depth (ft): | 5.5 |
| Downstream Average Channel Velocity (fps): | 0.26 |
| 3. REAERATION RATE (Base e) AT 20 deg C (day^-1): | 0.18 |

| Reference | Applic. Vel (fps) | Applic. Dep (ft) | Suggested Values |
|---|---|---|---|
| Churchill | 1.5 - 6 | 2 - 50 | 0.18 |
| O'Connor and Dobbins | .1 - 1.5 | 2 - 50 | 0.51 |
| Owens | .1 - 6 | 1 - 2 | 0.37 |
| Tsivoglou-Wallace | .1 - 6 | .1 - 2 | 1.36 |

4. BOD DECAY RATE (Base e) AT 20 deg C (day^-1): 2.28

| Reference | Suggested Value |
|---|---|
| Wright and McDonnell, 1979 | 2.28 |

## OUTPUT

| | |
|---|---|
| 1. INITIAL MIXED RIVER CONDITION | |
| CBOD5 (mg/L): | 1.2 |
| NBOD (mg/L): | 0.4 |
| Dissolved Oxygen (mg/L): | 7.5 |
| Temperature (deg C): | 26.4 |
| 2. TEMPERATURE ADJUSTED RATE CONSTANTS (Base e) | |
| Reaeration (day^-1): | 0.21 |
| BOD Decay (day^-1): | 3.05 |
| 3. CALCULATED INITIAL ULTIMATE CBODU AND TOTAL BODU | |
| Initial Mixed CBODU (mg/L): | 1.8 |
| Initial Mixed Total BODU (CBODU + NBOD, mg/L): | 2.2 |
| 4. INITIAL DISSOLVED OXYGEN DEFICIT | |
| Saturation Dissolved Oxygen (mg/L): | 8.041 |
| Initial Deficit (mg/L): | 0.56 |
| 5. TRAVEL TIME TO CRITICAL DO CONCENTRATION (days): | 0.87 |
| 6. DISTANCE TO CRITICAL DO CONCENTRATION (miles): | 3.65 |
| 7. CRITICAL DO DEFICIT (mg/L): | 2.24 |
| 8. CRITICAL DO CONCENTRATION (mg/L): | 5.80 |

# Surface Water Discharge:
# Streeter Phelps Model for
# Wet-Weather Only Dissolved Oxygen

Streeter-Phelps analysis of critical dissolved oxygen sag.

Based on Lotus File DOSAG2.WK1 Revised 19-Oct-93

## INPUT

| | |
|---|---|
| 1. EFFLUENT CHARACTERISTICS | Biolac |
| Discharge (cfs): | 0.75 |
| CBOD5 (mg/L): | 3 |
| NBOD (mg/L): | 3 |
| Dissolved Oxygen (mg/L): | 0 |
| Temperature (deg C): | 20 |
| 2. RECEIVING WATER CHARACTERISTICS | |
| Upstream Discharge (cfs): | 42.89 |
| Upstream CBOD5 (mg/L): | 1.0 |
| Upstream NBOD (mg/L): | 0.1 |
| Upstream Dissolved Oxygen (mg/L): | 9.99 |
| Upstream Temperature (deg C): | 15.4 |
| Elevation (ft NGVD): | 68 |
| Downstream Average Channel Slope (ft/ft): | 0.00128 |
| Downstream Average Channel Depth (ft): | 5.5 |
| Downstream Average Channel Velocity (fps): | 0.52 |
| 3. REAERATION RATE (Base e) AT 20 deg C (day^-1): | 0.36 |

| Reference | Applic. Vel (fps) | Applic. Dep (ft) | Suggested Values |
|---|---|---|---|
| Churchill | 1.5 - 6 | 2 - 50 | 0.36 |
| O'Connor and Dobbins | .1 - 1.5 | 2 - 50 | 0.72 |
| Owens | .1 - 6 | 1 - 2 | 0.59 |
| Tsivoglou-Wallace | .1 - 6 | .1 - 2 | 2.76 |

| | |
|---|---|
| 4. BOD DECAY RATE (Base e) AT 20 deg C (day^-1): | 1.62 |

| Reference | Suggested Value |
|---|---|
| Wright and McDonnell, 1979 | 1.62 |

## OUTPUT

| | |
|---|---|
| 1. INITIAL MIXED RIVER CONDITION | |
| CBOD5 (mg/L): | 1.0 |
| NBOD (mg/L): | 0.1 |
| Dissolved Oxygen (mg/L): | 9.8 |
| Temperature (deg C): | 15.5 |
| 2. TEMPERATURE ADJUSTED RATE CONSTANTS (Base e) | |
| Reaeration (day^-1): | 0.32 |
| BOD Decay (day^-1): | 1.32 |
| 3. CALCULATED INITIAL ULTIMATE CBODU AND TOTAL BODU | |
| Initial Mixed CBODU (mg/L): | 1.5 |
| Initial Mixed Total BODU (CBODU + NBOD, mg/L): | 1.7 |
| 4. INITIAL DISSOLVED OXYGEN DEFICIT | |
| Saturation Dissolved Oxygen (mg/L): | 9.957 |
| Initial Deficit (mg/L): | 0.14 |
| 5. TRAVEL TIME TO CRITICAL DO CONCENTRATION (days): | 1.36 |
| 6. DISTANCE TO CRITICAL DO CONCENTRATION (miles): | 11.56 |
| 7. CRITICAL DO DEFICIT (mg/L): | 1.15 |
| 8. CRITICAL DO CONCENTRATION (mg/L): | 8.80 |

Streeter-Phelps analysis of critical dissolved oxygen sag.

Based on Lotus File DOSAG2.WK1 Revised 19-Oct-93

## INPUT

| | |
|---|---|
| 1. EFFLUENT CHARACTERISTICS | Biolac |
| Discharge (cfs): | 0.75 |
| CBOD5 (mg/L): | 10 |
| NBOD (mg/L): | 10 |
| Dissolved Oxygen (mg/L): | 0 |
| Temperature (deg C): | 20 |
| 2. RECEIVING WATER CHARACTERISTICS | |
| Upstream Discharge (cfs): | 42.89 |
| Upstream CBOD5 (mg/L): | 1.0 |
| Upstream NBOD (mg/L): | 0.1 |
| Upstream Dissolved Oxygen (mg/L): | 9.99 |
| Upstream Temperature (deg C): | 15.4 |
| Elevation (ft NGVD): | 68 |
| Downstream Average Channel Slope (ft/ft): | 0.00128 |
| Downstream Average Channel Depth (ft): | 5.5 |
| Downstream Average Channel Velocity (fps): | 0.52 |
| 3. REAERATION RATE (Base e) AT 20 deg C (day^-1): | 0.36 |

| Reference | Applic. Vel (fps) | Applic. Dep (ft) | Suggested Values |
|---|---|---|---|
| Churchill | 1.5 - 6 | 2 - 50 | 0.36 |
| O'Connor and Dobbins | .1 - 1.5 | 2 - 50 | 0.72 |
| Owens | .1 - 6 | 1 - 2 | 0.59 |
| Tsivoglou-Wallace | .1 - 6 | .1 - 2 | 2.76 |

| | |
|---|---|
| 4. BOD DECAY RATE (Base e) AT 20 deg C (day^-1): | 1.62 |

| Reference | Suggested Value |
|---|---|
| Wright and McDonnell, 1979 | 1.62 |

## OUTPUT

| | |
|---|---|
| 1. INITIAL MIXED RIVER CONDITION | |
| CBOD5 (mg/L): | 1.2 |
| NBOD (mg/L): | 0.3 |
| Dissolved Oxygen (mg/L): | 9.8 |
| Temperature (deg C): | 15.5 |
| 2. TEMPERATURE ADJUSTED RATE CONSTANTS (Base e) | |
| Reaeration (day^-1): | 0.32 |
| BOD Decay (day^-1): | 1.32 |
| 3. CALCULATED INITIAL ULTIMATE CBODU AND TOTAL BODU | |
| Initial Mixed CBODU (mg/L): | 1.7 |
| Initial Mixed Total BODU (CBODU + NBOD, mg/L): | 2.0 |
| 4. INITIAL DISSOLVED OXYGEN DEFICIT | |
| Saturation Dissolved Oxygen (mg/L): | 9.957 |
| Initial Deficit (mg/L): | 0.14 |
| 5. TRAVEL TIME TO CRITICAL DO CONCENTRATION (days): | 1.37 |
| 6. DISTANCE TO CRITICAL DO CONCENTRATION (miles): | 11.64 |
| 7. CRITICAL DO DEFICIT (mg/L): | 1.34 |
| 8. CRITICAL DO CONCENTRATION (mg/L): | 8.62 |

# Cooling Tower/Chiller
# Temperature Compliance – Surface Water Discharge
# Capital and O&M Cost Estimates

**ENGINEER'S ESTIMATE OF PROBABLE CONSTRUCTION COST**

**Project:** **Yacolt General Sewer Plan - Cooling Tower/Chiller - Capital Cost**

Level: Planning

**KENNEDY/JENKS CONSULTANTS**

**Prepared By:** EJB
**Date Prepared:** 7-Jan-11
**K/J Proj. No.:** 0991020*00

| | | | Materials | | Installation | | |
|---|---|---|---|---|---|---|---|
| **Description** | **Qty** | **Units** | **$/Unit** | **Total** | **$/Unit** | **Total** | **Total** |
| **DIV 02 - Sitework** | | | | | | | |
| Chiller&Tower Excavation | 146 | CY | $0.00 | $0 | $14.55 | $2,129 | $2,129 |
| Chiller&Tower Backfill and Compaction | 120 | CY | $15.00 | $1,794 | $17.90 | $2,141 | $3,936 |
| | | | | $0 | | $0 | $0 |
| **Subtotal Div 02** | | | | | | | **$6,064** |
| **DIV 3 - Concrete** | | | | | | | |
| Chiller/Tower/ Control building Concrete Pad | 26.7 | CY | $ 300 | $8,000 | $200 | $5,333 | $13,333 |
| | | | | | | | |
| **Subtotal Div 03** | | | | | | | **$13,333** |
| **DIV 11 - Equipment** | | | | | | | |
| Chiller/Tower/Heat exchanger package | 1 | LS | $ 333,500 | $333,500 | $166,750 | $166,750 | $500,250 |
| (Source: Trane Cooling Systems) | | | | | | | |
| **Subtotal Div 11** | | | | | | | **$500,250** |
| **DIV 15 - Mechanical** | | | | | | | |
| 12" DI Piping | 50 | LF | $ 35.50 | $1,775 | $21.95 | $1,098 | $ 2,873 |
| | | | | | | | |
| | | | | | | | |
| **Subtotal Div 15** | | | | | | | **$2,873** |
| **DIV 16 - Electrical** | | | | | | | |
| Electrical Cost Est 15% | 1 | LS | | | $ 75,468 | $ 75,468 | $ 75,468 |
| **Subtotal Div 16** | | | | | | | **$75,468** |
| **Subtotals** | | | | | | | **$597,989** |
| General Conditions | | @ | | | | 5% | $29,899 |
| Subtotals | | | | | | | $ 627,900 |
| Contractor OH&P | | @ | | | | 15% | $ 94,200 |
| Subtotals | | | | | | | $ 722,100 |
| Sales Tax | | @ | | | | 8.2% | $ 59,200 |
| Subtotals | | | | | | | $ 781,300 |
| Estimate & Construction Contingency | | @ | | | | 25% | $ 180,500 |
| Subtotals | | | | | | | $ 961,800 |
| ELA | | @ | | | | 25% | $ 195,300 |
| **Estimated Construction Cost** | | | | | | | **$ 1,200,000** |

## Yacolt - General Sewer Plan: Cooling/Tower Chiller - Annual O&M Cost

**Operation Scheme - Summer Time Only**
**7** days per week
**24 hours per day**

**Cooling to 16 C**

| **Electric Rates** | |
|---|---|
| Consumption | $0.060 kWh |

| **Electricity Demand** | | **Annual Electricity Cost** | **# Equipment** | **Pump Power** Hp | (kW) | **Avg # Operating Daily** | **Daily Operations Hours** | **Annual Operation Hours** | **Annual Consumption** | Consumption | Demand |
|---|---|---|---|---|---|---|---|---|---|---|---|
| **Eff Cooling** | | | | | | | | | | | |
| Cooling tower | Fan | $ 610 | 1 | 3 | 2.2 | 1 | 24 | 4536 | $ 610 | | |
| Chiller | Compressor | $ 25,990 | 1 | 128.02 | 95.5 | 1 | 24 | 4536 | $ 25,990 | | |
| | Pumps | $ 810 | 2 | 2 | 1.5 | 2.00 | 24 | 4536 | $ 810 | | |
| | | | | Load Size | 99.23 | | | | | | |
| | | **Energy Total $ 27,410** | | | | | | | | | |

**Maintenance & Replacement**

| | | **Mait./Repl Total** | **Cost** | | | | | |
|---|---|---|---|---|---|---|---|---|
| **Eff Cooling** | | | | | | | | |
| Cooling Tower | Tower media | $ 5,000 | | Once every 5 years | | | | |
| Chiller | | | | | | | | |
| | Cleaning of Heat Exchanger | $ 1,200 | 50 | 24 | One person 1.5 days/ 2 times per year during summer | | | |
| | Labor | $ 10,800 | 50 | 216 | 1 FTE for 8 hr/week during summer 4 hr/week during winter @ $50/person/week | | | |
| | **Mait And Replac Total** | **$ 12,000** | | | | 8 | 216 | |
| | **TOTAL ANNUAL O&M** | **$ 39,400** | | | | | | |

# Yacolt - General Sewer Plan: Cooling/Tower Chiller - Present Worth O&M Cost

**Phase I O&M Subtotal** **$39,400**

Interest Rate 5%

| Year | year | P/A, I, N | O&M | P/G, I, N | Gradient | Present Worth |
|---|---|---|---|---|---|---|
| 2010 | 0 | | | | | **$ 597,989** |
| 2011 | 1 | 0.9524 | $39,400 | 0.0000 | $ - | $ 635,512 |
| 2012 | 2 | 1.8594 | $39,400 | 0.9070 | $ - | $ 671,249 |
| 2013 | 3 | 2.7232 | $39,400 | 2.6347 | $ - | $ 705,285 |
| 2014 | 4 | 3.5460 | $39,400 | 5.1028 | $ - | $ 737,699 |
| 2015 | 5 | 4.3295 | $39,400 | 8.2369 | $ 5,000 | $ 809,755 |
| 2016 | 6 | 5.0757 | $39,400 | 11.9680 | $ - | $ 797,971 |
| 2017 | 7 | 5.7864 | $39,400 | 16.2321 | $ - | $ 825,972 |
| 2018 | 8 | 6.4632 | $39,400 | 20.9700 | $ - | $ 852,639 |
| 2019 | 9 | 7.1078 | $39,400 | 26.1268 | $ - | $ 878,037 |
| 2020 | 10 | 7.7217 | $39,400 | 31.6520 | $ 5,000 | $ 1,060,485 |
| 2021 | 11 | 8.3064 | $39,400 | 37.4988 | $ - | $ 925,261 |
| 2022 | 12 | 8.8633 | $39,400 | 43.6241 | $ - | $ 947,201 |
| 2023 | 13 | 9.3936 | $39,400 | 49.9879 | $ - | $ 968,095 |
| 2024 | 14 | 9.8986 | $39,400 | 56.5538 | $ - | $ 987,995 |
| 2025 | 15 | 10.3797 | $39,400 | 63.2880 | $ 5,000 | $ 1,323,387 |
| 2026 | 16 | 10.8378 | $39,400 | 70.1597 | $ - | $ 1,024,997 |
| 2027 | 17 | 11.2741 | $39,400 | 77.1405 | $ - | $ 1,042,187 |
| 2028 | 18 | 11.6896 | $39,400 | 84.2043 | $ - | $ 1,058,558 |
| 2029 | 19 | 12.0853 | $39,400 | 91.3275 | $ - | $ 1,074,150 |
| 2030 | 20 | 12.4622 | $39,400 | 98.4884 | $ 5,000 | $ 1,581,442 |
| | | | | | | **$ 1,600,000** |